SPRAY EQUIPMENT

Service Manual

Proportioning Unit

novaG III PLUS

Issue 2.4 - 20/10/20
Ref. NR-00004-ENG

Before installing the unit and starting it up, carefully read all the technical and safety documentation included in this manual. Pay special attention to the information to know and understand the operation and the conditions of use of the unit. All of the information is aimed at enhancing

User Safety and avoiding possible breakdowns derived from the incorrect use of the unit.

WARRANTY

HI-TECH SPRAY EQUIPMENT (hereinafter "HI-TECH") provides this **LIMITED WARRANTY** (hereinafter "Warranty") to the original purchaser (hereinafter "Customer") covering this equipment and the original HI-TECH manufactured accessories delivered with the equipment (hereinafter "Product") against defects in material or workmanship of the Product (hereinafter "Defect" or "Defective") for a period of two (2) years from the date of first purchase as shown on the original HI-TECH invoice (hereinafter "Warranty Period").

If during the Warranty Period under normal use, the Product is suspected by Customer to be Defective in material or workmanship, it is Customer's responsibility to contact HI-TECH and return the Product to HI-TECH as directed by HI-TECH, freight prepaid. If HI-TECH determines that the Product is Defective and that such Defect is covered by this Warranty, HI-TECH will credit Customer for the reasonable freight charges incurred by Customer in returning the Defective Product to HI-TECH, and HI-TECH (or its authorized agent) will, at HI-TECH's option, repair or replace the Product, subject to the following:

Original Invoice: The original invoice must be kept as proof of the date of first sale and the Product serial number. The Warranty does not cover any Product if the Original Invoice appears to have been modified or altered, or when the serial number on the Product appears to have been altered or defaced.

Product Maintenance: It is the Customer's responsibility to maintain the Product properly. See your maintenance schedule and owner's manual for details. The Warranty does not cover an improperly maintained Product.

Non-HI-TECH Components and Accessories: Non-HI-TECH manufactured components and accessories that are used in the operation of the Product are not covered by this Warranty. Such components and accessories shall be subject to the warranty offered to the Customer, if any, by the original manufacturer of such component or accessory.

Other Warranty Exclusions: The Warranty does not cover any Product that HI-TECH determines has been damaged or fails to operate properly due to misuse, negligence, abuse, carelessness, neglect, or accident. By way of example only, this includes:

- Normal wear and tear.
- Improper or unauthorized installation, repair, alteration, adjustment or modification of the Product.
- Use of heating devices, pumping equipment, dispensers, or other parts or accessories with the Product that have not been approved or manufactured by HI-TECH.
- Failure to follow the operating instructions and recommendations provided by HI-TECH.
- Cosmetic damage.
- Fire, flood, "acts of God," or other contingencies beyond the control of HI-TECH.

THE WARRANTY DESCRIBED HEREIN IS THE EXCLUSIVE REMEDY FOR THE CUSTOMER AND IS IN LIEU OF ALL OTHER WARRANTIES, EXPRESS, IMPLIED, STATUTORY OR OTHERWISE, AND THE IMPLIED WARRANTIES OF MERCHANTABILITY AND FITNESS FOR A PARTICULAR PURPOSE AND ALL OTHER WARRANTIES ARE HEREBY DISCLAIMED. TO THE FULLEST EXTENT PERMITTED BY LAW, HI-TECH SHALL NOT BE RESPONSIBLE, WHETHER BASED IN CONTRACT, TORT (INCLUDING, WITHOUT LIMITATION, NEGLIGENCE), WARRANTY OR ANY OTHER LEGAL OR EQUITABLE GROUNDS, FOR ANY CONSEQUENTIAL, INDIRECT, INCIDENTAL, LOST PROFITS, SPECIAL, PUNITIVE OR EXEMPLARY DAMAGES, WHETHER TO PERSON OR PROPERTY, ARISING FROM OR RELATING TO THE PRODUCT, EVEN IF HI-TECH HAS BEEN ADVISED OF THE POSSIBILITY OF SUCH LOSSES OR DAMAGES.

Non-Warranty Service by HI-TECH: If HI-TECH determines that the suspected Defect of the Product is not covered by this Warranty, disposition of the Product will be made pursuant to the terms and conditions of HI-TECH's written estimate on a time and materials basis.

Continuing Warranty for Products Repaired or Replaced under Warranty: Following the repair or replacement of a Product covered by this Warranty, such Product will continue to be subject to the original Warranty for the remainder of original Warranty Period or for three (3) months from the repair or replacement date, whichever is longer.

No Rights Implied: Nothing in the sale, lease or rental of any Product by HI-TECH shall be construed to grant any right, interest or license in or under any patent, trademark, copyright, trade secret or other proprietary right or material owned by anyone; nor does HI-TECH encourage the infringement of same.

Exclusive Warranty: This writing is the final, complete, and exclusive expression of the Warranty covering the Product. Any statements made by HI-TECH, its employees or agents that differ from the terms of this Warranty shall have no effect. It is expressly understood that Customer's acceptance of this Warranty, by performance or otherwise, is upon and subject solely to the terms and conditions hereof, and any additional or different terms and conditions proposed or expressed by Customer or anyone, whether in writing or otherwise, are null and void unless specifically agreed to in writing by an Officer of HI-TECH

All information provided in this Service Manual is assumed to be correct; although this does not constitute any implicit or explicit liability or guarantee. HI-TECH reserves the right at any time and without prior warning to make all improvements and modifications necessary to this Service Manual, in order to rectify any possible typographical errors, supplement the information contained or insert changes predicated by the performance or use of the unit.

SAFETY AND HANDLING

The **novaG - III** series metering unit has been designed and manufactured in full compliance to the provisions of Machine Directive 89/392/CEE in its modified form and the National Regulations that transpose it. It also meets all European Directives concerning electromagnetic compatibility and electrical safety and the provisions of the Harmonized Norms that are applicable.

This chapter contains information on the safety, handling and use of the **novaG - III** series metering unit.

Before installing the unit and starting it up, carefully read all the technical and safety documentation included in this manual. Pay special attention to the information to know and understand the operation and the conditions of use of the unit. All of the information is aimed at enhancing User Safety and avoiding possible breakdowns derived from the incorrect use of the unit.

WARNING! Establishes information to alert on a situation that might cause serious injuries if the instructions are not followed.

PRECAUTION! Establishes information that indicates how to avoid damage to the unit or how to avoid a situation that could cause minor injuries.

NB: is relevant information on a procedure being carried out.

Careful study of this manual will enable the operator to know the characteristics of the unit and the operating procedures. By following the instructions and recommendations contained herein, you will reduce the potential risk of accidents in the installation, use or maintenance of the unit; you will provide a better opportunity for incident-free operation for a longer time, greater output and the possibility of detecting and resolving problems fast and simply.

Keep this Service Manual for future consultation of useful information at all times. If you lose this manual, ask for a new copy from your **HI-TECH** local distributor or directly contact **HI-TECH SPRAY EQUIPMENT.**

WARNING! The design of the novaG - III series metering unit does not allow its use in potentially explosive atmospheres or to exceed the pressure and temperature limits described in the technical specifications of this manual.

When working with the unit, it is recommended that the operator wear suitable clothing and elements of personal protection, including, without limitation, gloves, protective goggles, safety footwear and face masks. Use breathing equipment when working with the machine in enclosed spaces or in areas with insufficient ventilation. The introduction and follow-up of safety measures must not be limited to those described in this manual. Before starting up the machine, a comprehensive analysis must be made of the risks derived from the products to be dispensed, the type of application and the working environment

To prevent all possible bodily harm caused by incorrect handling of the raw materials and solvents used in the process, carefully read the safety information provided by your supplier.

Deal with the waste caused according to current regulations.

Disconnect the unit from the power supply before carrying out any operation inside the electrical console.

The electrical maintenance of the machine must only be performed by a qualified electrician.

To avoid damage caused by the impact of pressurized fluids, do not open any connection or perform maintenance work on components subject to pressure until the pressure has been completely eliminated.

Use suitable protection when operating, maintaining or remaining in the operating area of the unit. This includes, but is not limited to, the use of masks, protective goggles, gloves, shoes and safety clothing.

The unit includes components that reach temperatures that are liable to cause burns. The hot parts of the unit must not be handled until they have cooled.

To prevent serious harm by crushing or loss of limbs, do not work with the unit without the safety guards installed on all moving parts. Make sure that all of the safety protections are correctly reinstalled after all repair or maintenance work is completed.

CHARACTERISTICS

The **novaG – III PLUS** metering unit has been designed and built for the application of Polyureas, chemical systems for polyurethane foaming and some two-component epoxy systems.

Principal Heating System

Consists of two independent heaters without seals. Each heater has four 1500 W heating elements, that give the unit a total power of 6000 W, and the necessary control and safety components for precise operation of the system. Its singular configuration allows a temperature differential (ΔT) of 90º F and application temperatures of up to 194º F under normal conditions of ambient temperature.

Hose Heating System

Designed with a 3000 W isolation transformer that enables effective heating up to a total hose length of 305 feet for foam and 256 ft for polyurea. The system includes an innovative hose heating concept in which the copper heating element is spread evenly around the circumference of the hose, providing a uniform heating watt density and precise control of the product application temperature. This hose heating element design is extremely resistant to fatigue failure.

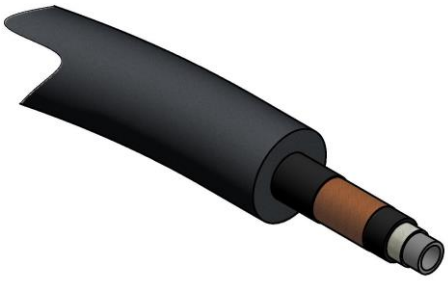

100% circumferential coverage produces the most homogenous distribution of heat available.

Double Acting Opposed Piston Metering Pumps

A pump line driven by a double rod hydraulic cylinder. The in line pump system with opposed piston pumps provides a constant volume and guarantees uniform pressures in both directions of pump movement. Different sized pumps allow for various volumetric ratios to be achieved (1:4 to 4:1) between the chemical components used in the process.

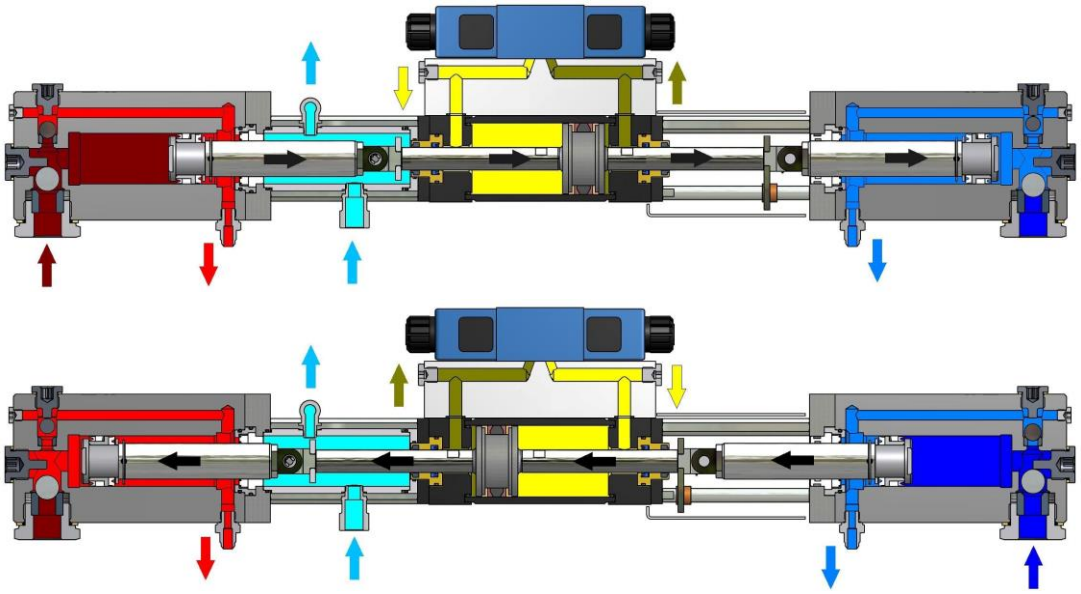

TECHNICAL SPECIFICATIONS

Electrical

Main voltage: 230 V / 400 V
Frequency: 50/60 Hz
Electrical consumption: 66.5 A @ 3PE~230 V / 38.4 A @ 3PE~400 V
Pre Heater power: (2 x 6 kW) 12 kW
Hose Transformer Power ***(*)***: 3 kW
Electrical Motor Power: 4 kW
Total Active Power: 19 kW

Inside the console, there is a terminal strip for connecting the main power (wire not supplied) to the unit. The electrical connection of the unit must only be carried out by a qualified electrician.

Mechanical

Maximum working pressure P1 (with pumps 1.2): 240 bar (24 MPa)
Max. Production ratio 1:1 (with pumps 1.2 @ P1): 8 kg/min
Normal working pressure P2 (with pumps 1.2): 160 bar (16 MPa)
Max. Production ratio 1:1 (with pumps 1.2 @ P2): 12 kg/min
Minimum production: 1 kg/min
Maximum hose length for foam: 93 m
Maximum hose length for polyurea: 78 m
Recommended compressor: 3 HP III phase

Approximate weight (hydraulic tank empty): 250 kg
Approximate weight (hydraulic tank full): 309 kg
Dimensions: H: 1352 mm / W: 945 mm / L: 745 mm

3PE~400V 50/60Hz

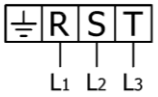

3PE~230V 60Hz

(*) For temperatures above 75ºC, the maximum hose length will be 78m.

GENERAL DESCRIPTION

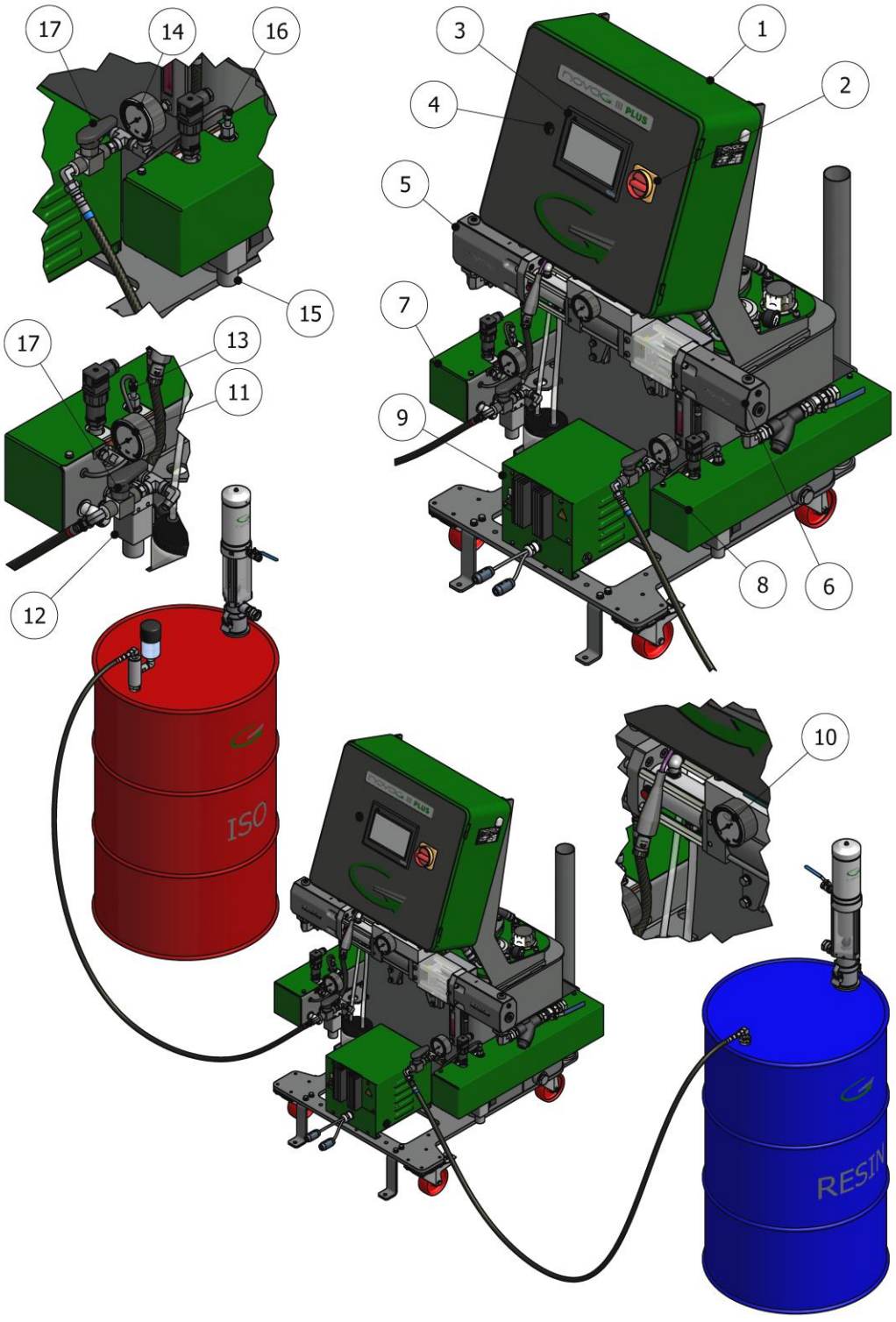

Figure 1. ***General Description.***

1. Control Panel

Controls and regulates the operation of the unit.

2. Power switch

Connect or disconnect the electrical supply to electric cabinet. Must be ON to make any operation with the unit. The led located on top of the tactile screen, will light up when de position be ON, as also the screen.

3. Tactile Screen

From different screens and sub screens, the required parameters can be settled, as also select some different systems and view breakdown and functional data saved during the projection.

4. USB port.

It allows to capture of functional data within external storage unit.

5. Isocyanate Metering Pump

Meters the Isocyanate.

6. Polyol Metering Pump

Meters the Polyol.

7. Isocyanate Pre Heater

Heats the Isocyanate to the pre-set temperature.

8. Polyol Pre Heater

Heats the Polyol to the pre-set temperature.

9. Hose Heating Transformer

Supplies the required voltage for heating the hoses.

10. Hydraulic Pressure Gage

Indicates the pressure in the hydraulic drive system.

11. Isocyanate Pressure Gage

Indicates the pressure in the Isocyanate system.

12. Isocyanate Safety Pressure Switch

Deactivates the directional valve in the event of excessive pressure in the Isocyanate system.

13. Isocyanate Temperature probe

Provides information on the temperature of the Isocyanate.

14. Polyol Pressure Gage

Indicates the pressure in the Polyol system.

15. Polyol Safety Pressure Switch

Deactivates the directional valve in the event of excessive pressure in the Polyol system.

16. Polyol Temperature Probe

Provides information on the temperature of the Polyol.

17. Recirculation Kit (optional)

18. Hydraulic Pressure Regulator

Allows the pressure of the hydraulic system to be increased or decreased. Turn clockwise to increase the pressure and counter clockwise to reduce it. In order to regulate the pressure of the hydraulic system, the NORMAL or RETRACT key must be activated.

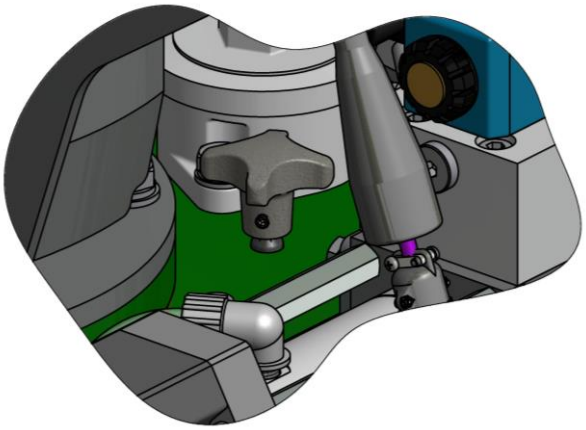

Regulate the hydraulic system so that the output pressure of the unit never exceeds the pressure of work of the installed product hoses

TACTIL SCREEN

Example Description Elements Screens

Following, the kinds of icons and specific areas which can finding on each screen, are described:

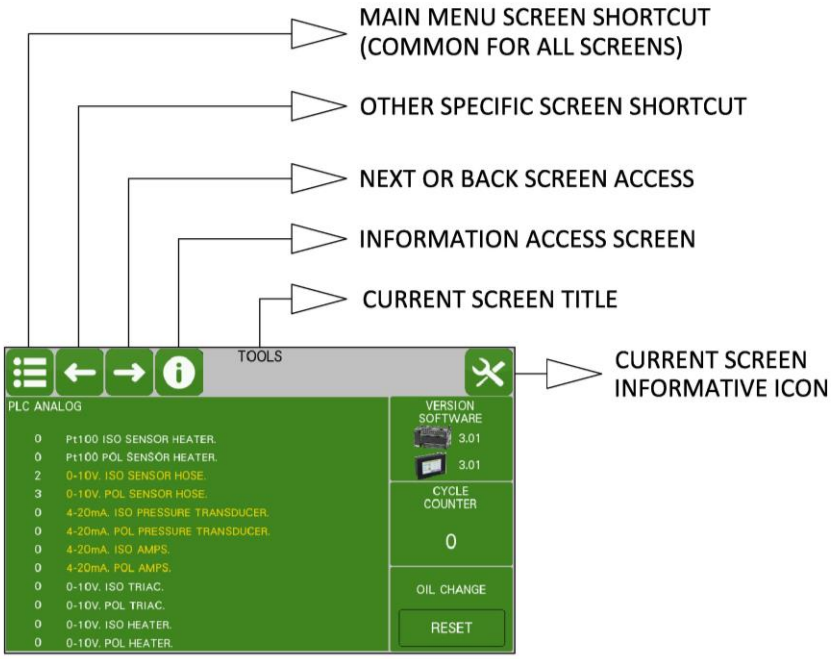

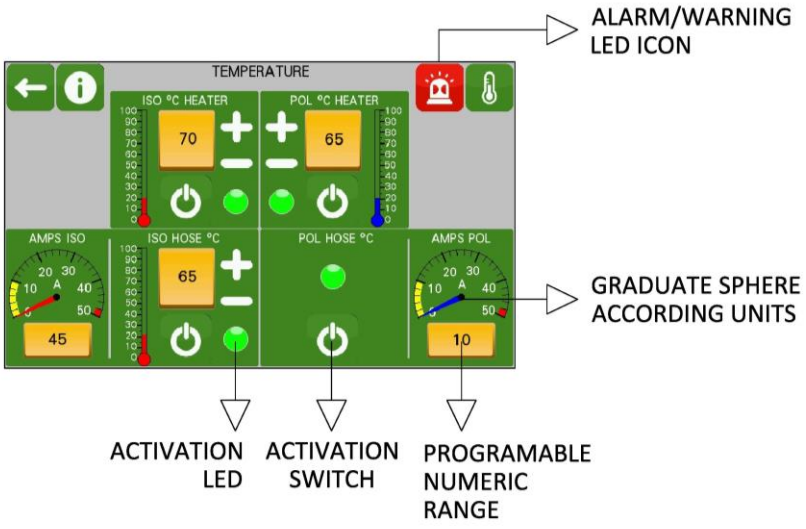

Main screens map

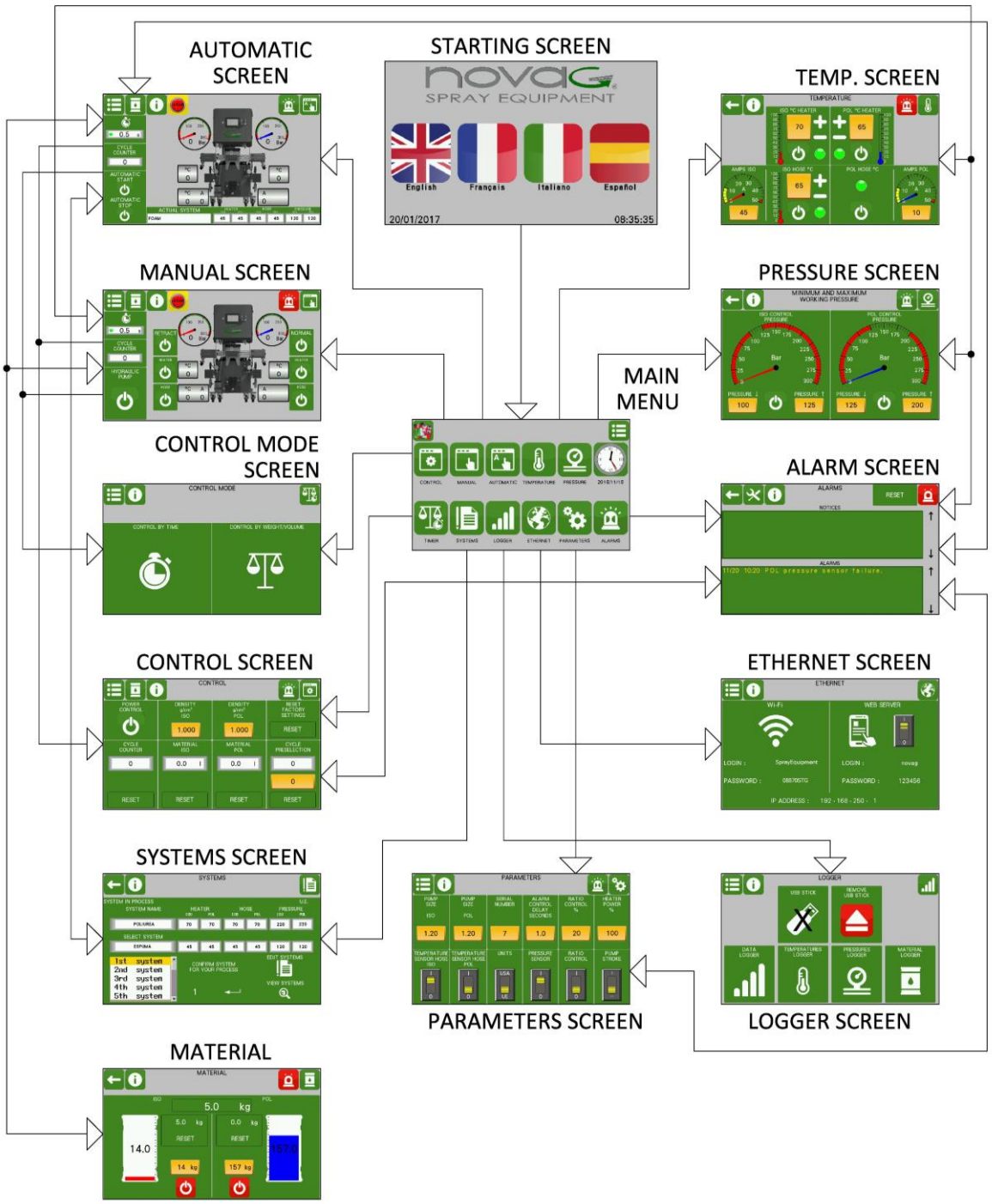

(*) The dosage screen is appropriate for optional machine software.

Sub screens control mode map (Optional)

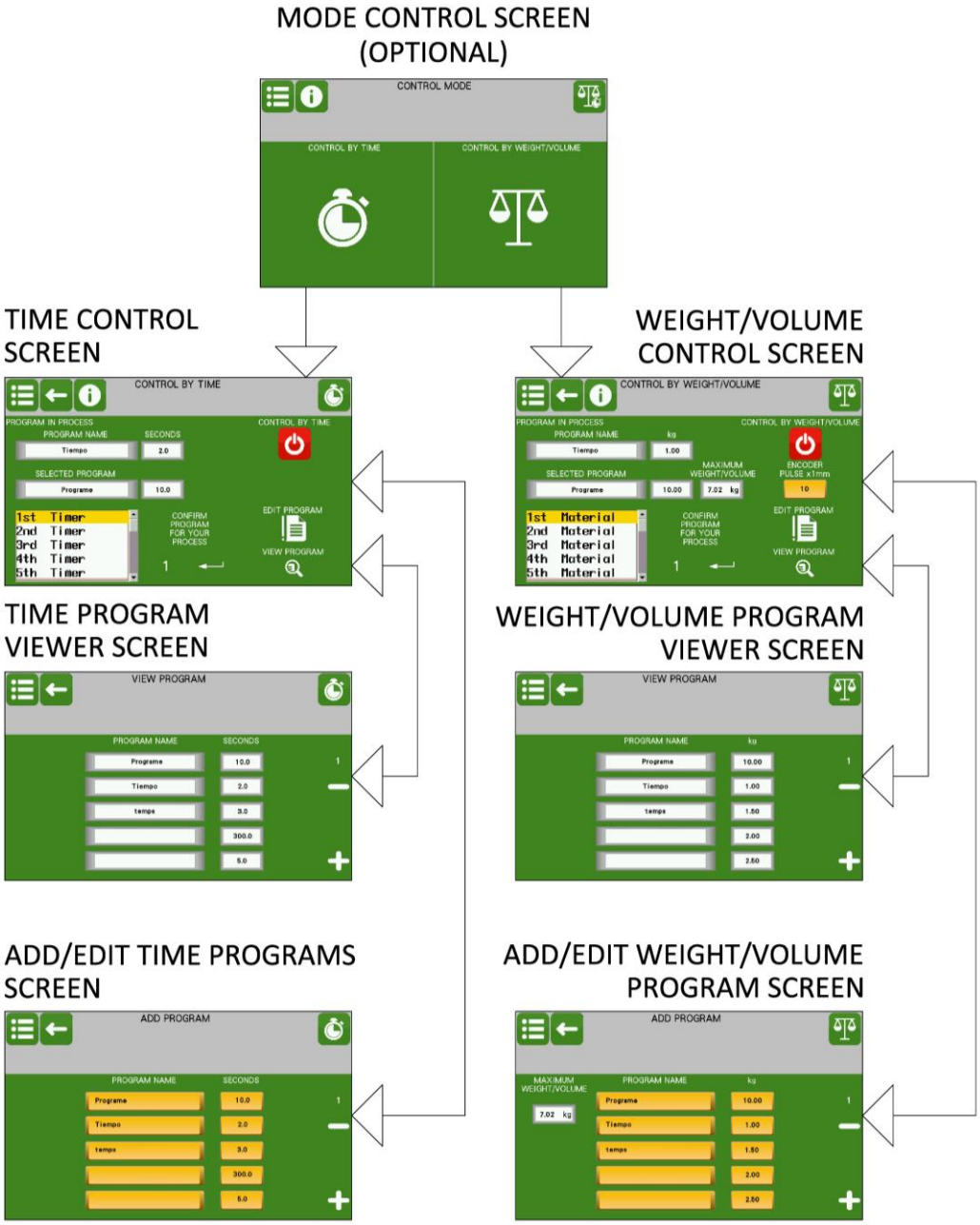

Sub screens Parameters Map

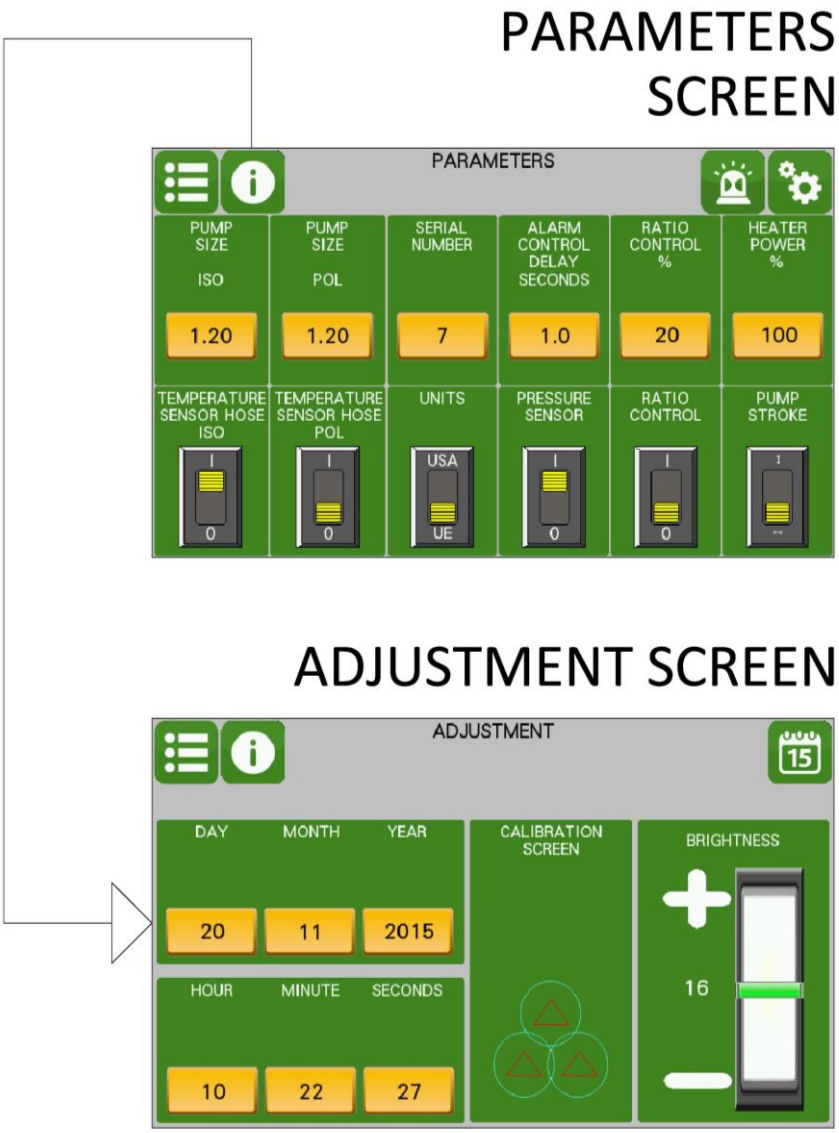

System Sub screens map

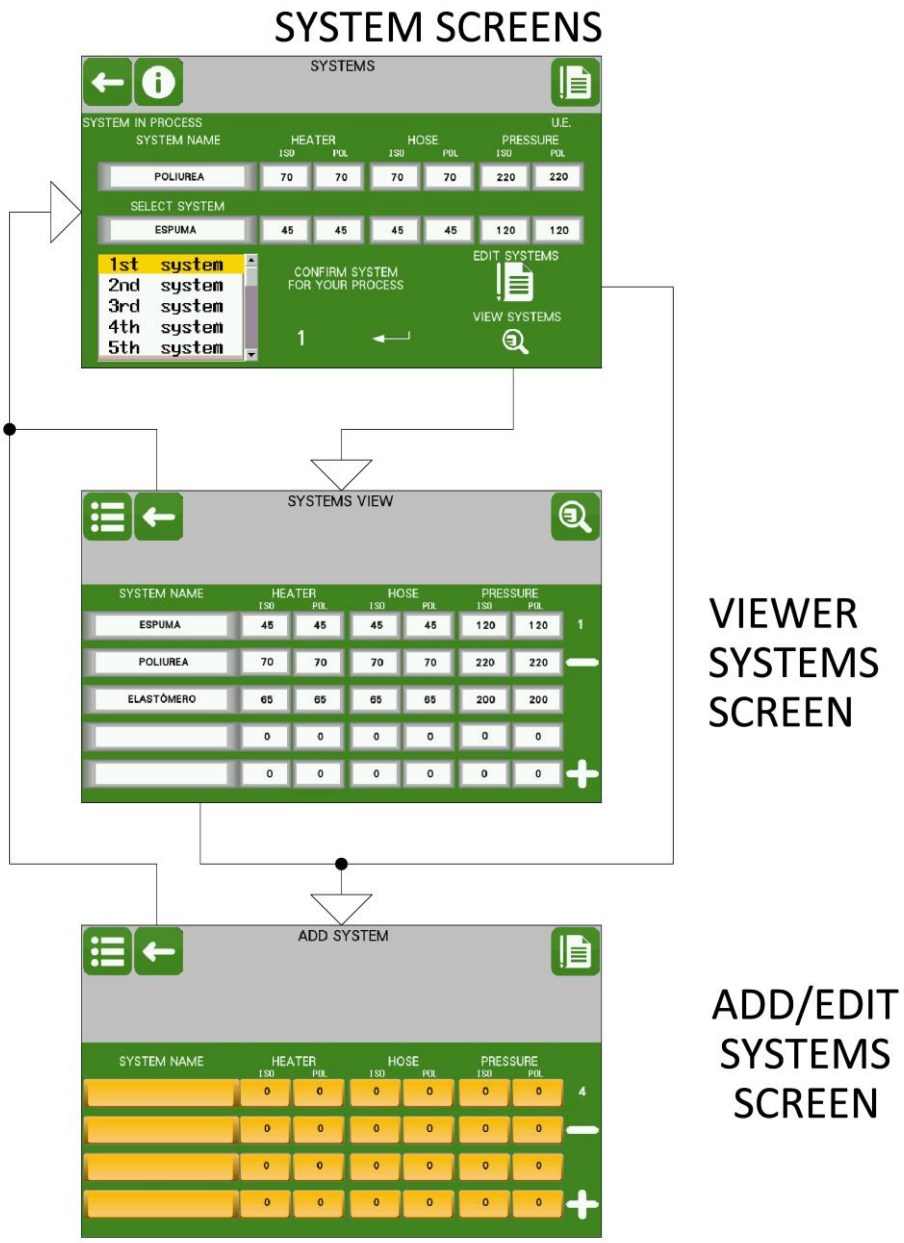

Logger sub screen map

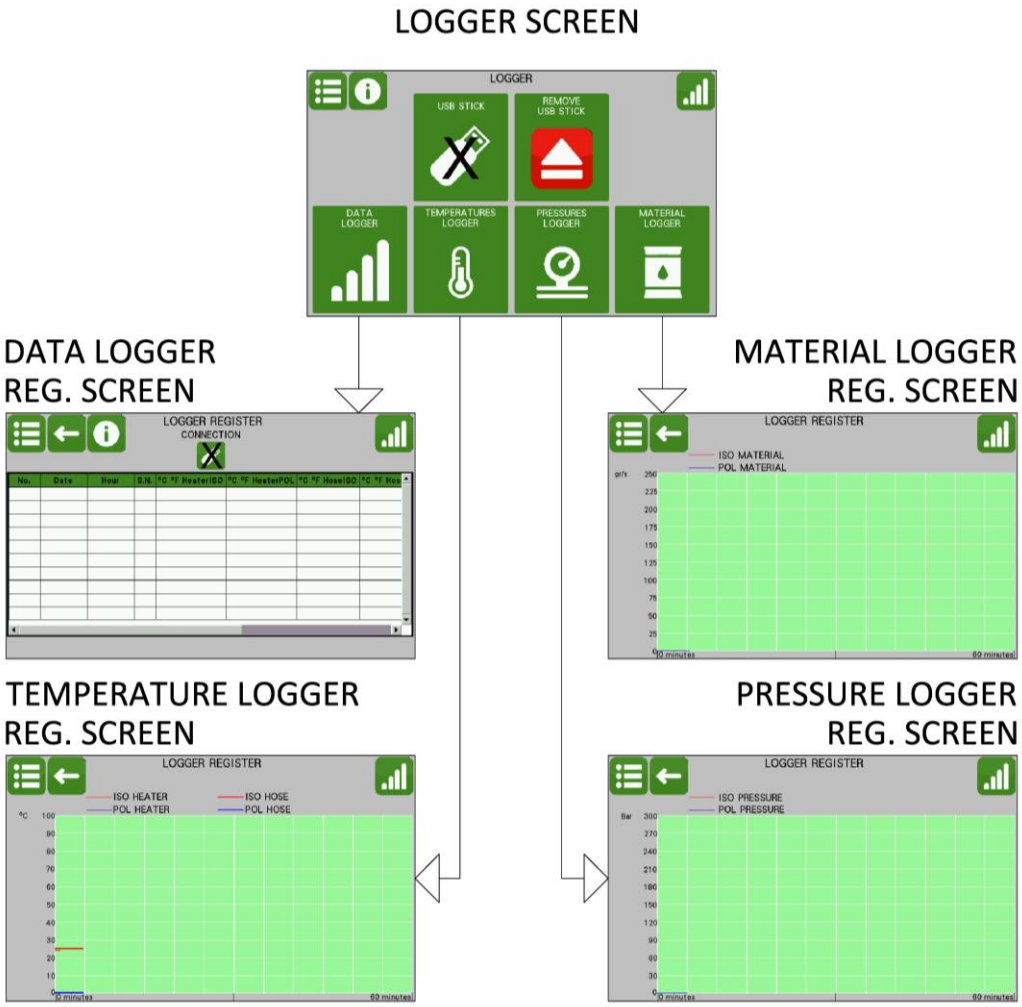

Alarm sub screens map

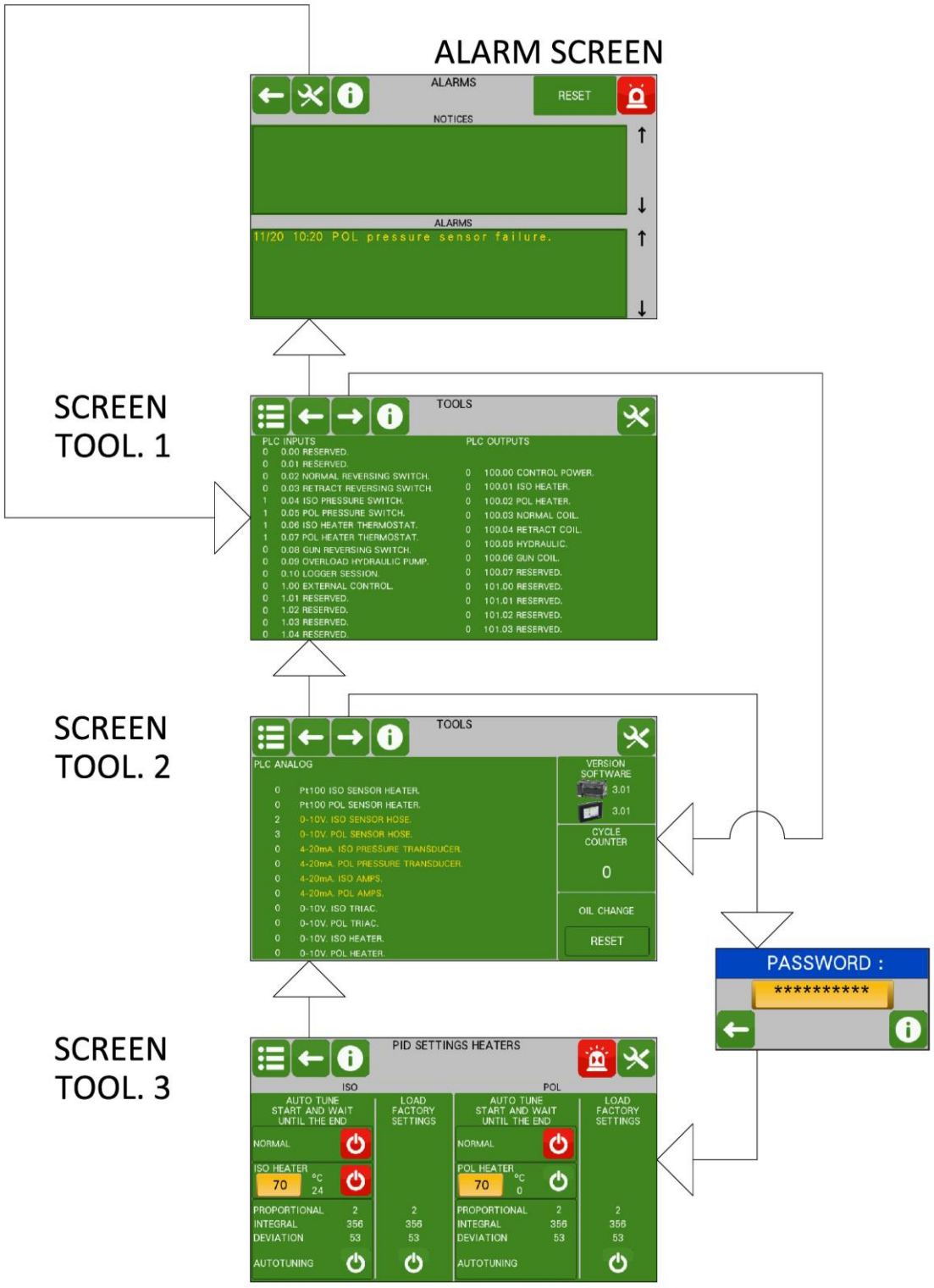

Screens information

CONTROL MODE SCREEN	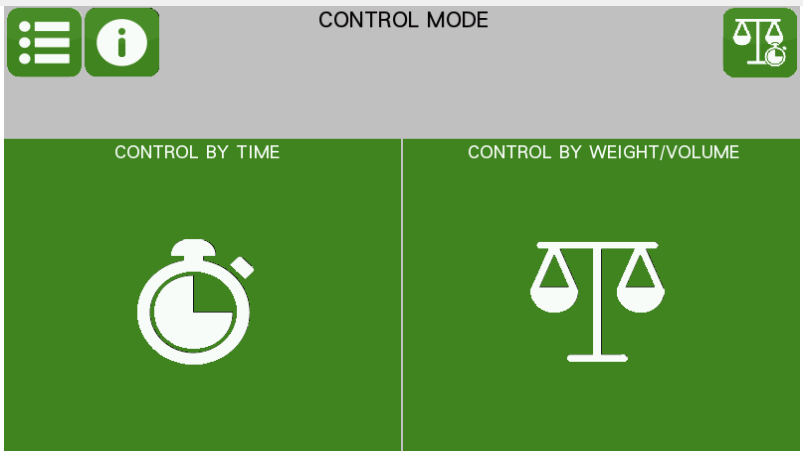
	1st Select the way of dosage that more adjust to his system of work.

CONTROL BY TIME (SUBSCREEN)

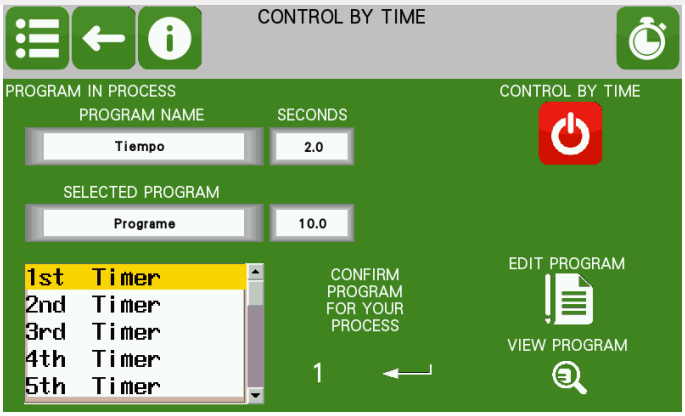

1st Select the program wished and confirm for his back process.

2nd Display the programs edited.

3rd Edit new programs. (Minimum 0,5 maximum 999,0 seconds).

4th Activate the program by time.

CONTROL BY WEIGHT/VOLUME (SUBSCREEN)

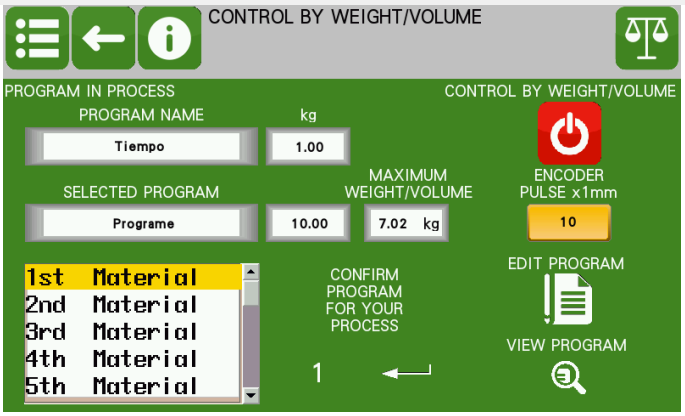

1st For a correct dosage by volume or weight is necessary:
- a/ Enter the correct size of the pumps.
- b/ Enter the density of the product (ISO,POL), if it is unknown enter the value of 1.000.
- c/ Enter the generated pulses by the encoder in the course 1mm.

2nd Select the program wished by weight, (must have installed an lineal encoder on the machine).

3rd Display the programs edited.

4th Edit new programs.

5th Activate the program by weight.

MANUAL SCREEN

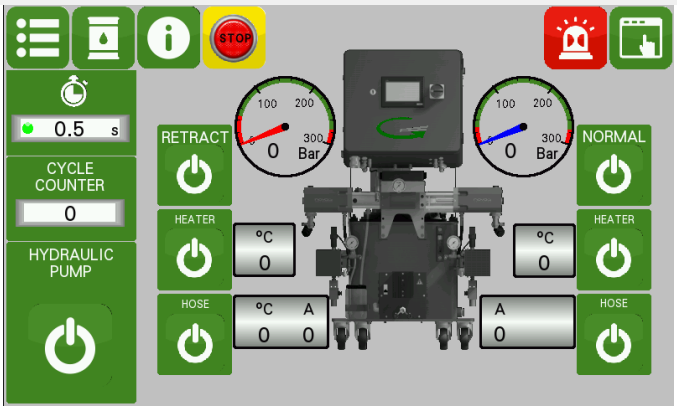

1st Select "RETRACT" or "NORMAL" function.

2nd Display the existence of alarms and warnings.

3rd Display the counter cicles (go to the control screen for other functions of the counter).

4th Display and state of the timer.

5th Display and control of the pressures.

6h Display and control of the heaters and hoses temperature.

7th Start up and stop of the hydraulic pump.

8th Stop button to disable power control.

AUTOMATIC SCREEN

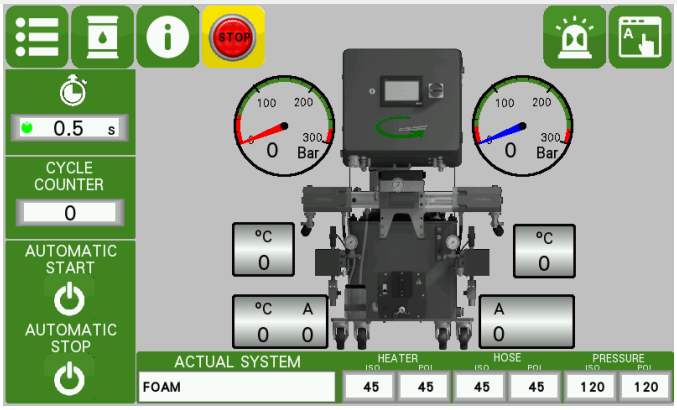

1st Direct access to the screen systems.

2nd Display the existence of alarms and warnings.

3rd Display the current recipe.

4th Display cycles counter.

5th Display and control of the pressures.

6th Display and control of the heaters and hoses temperature.

7th Starting and stopping the automatic start of the machine.

8th Stop button to disable power control.

TEMPERATURE SCREEN

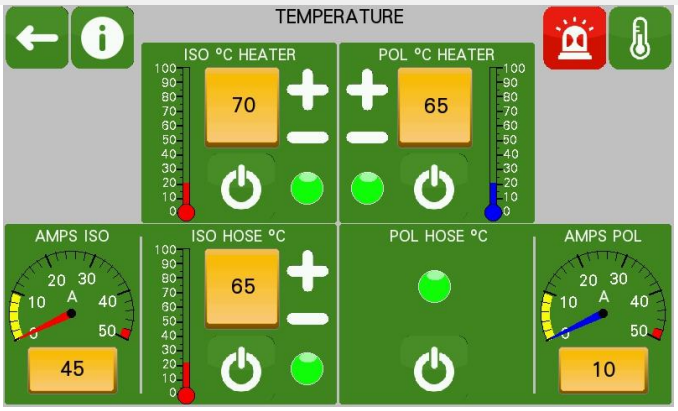

1st Only positive temperatures can be displayed.

2nd Use rectangular yellow buttons to entering numeric constants.

3rd In order to automatically control the hose temperature, the sensor temperature must be activated in the parameter view.

4th Maximum temperature for heating is 90ºC, and 80ºC for the hoses. Temperature for the hoses cannot be higher than for the heaters.

5th With the automatic hose temperature system off, the amps will drop to 35 in case a higher value is kept for more than 20 minutes.

According to following table, the values of intensity to reach the temperature depending on each application, are:

30 A	**38º C**	**100º F**
35 A	**48º C**	**118º F**
40 A	**60º C**	**140º F**
45 A	**75º C**	**167º F**
50 A	**80º C**	**176º F**

MATERIAL SCREEN

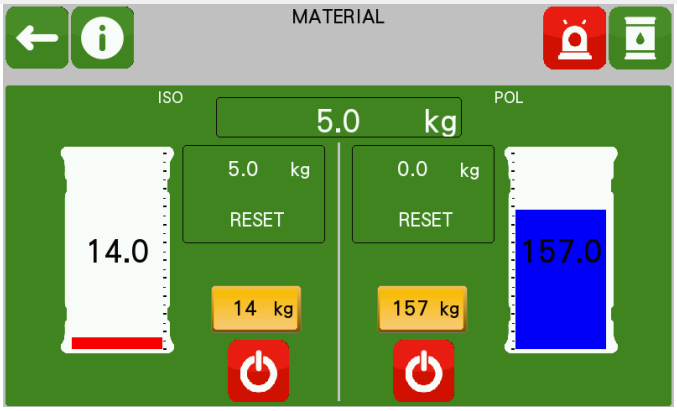

1st Control to stop the machine when the drum is empty.

2nd The rectangular yellow buttons are for numeric constants input.

3rd To display in liters, density must be 1.000 for ISO and POL, for kg-lb, density must be different from 1.000 in ISO or POL, (control screen).

4th Functioning conditions:
a/ The material in the drum can be entered in the yellow key.
b/ Activate on key and go ON, Activate NORMAL function (manual screen), with normal spray.

5th When they remauin 15 kg/l, 33lb, 4gal the machine will give a warning and will stop, having to refill or replace the drum, and the reactivate ON key, activate NORMAL function (manual screen).

PRESSURE SCREEN

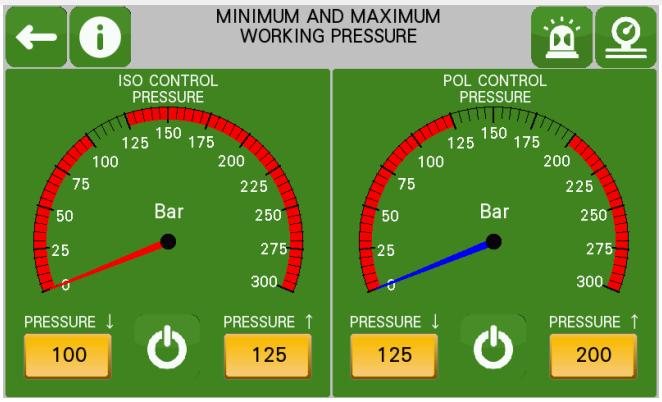

1st The rectangular yellow buttons are for numeric constants input.

2nd For the activation of the pressure control it have to be activated the pressure sensor on the parameters screen.

3rd Pressure control only with the function "NORMAL" activated.

4th Enter the minimum working pressure >30Bar.

5th Enter the maximum working pressure <275Bar.

6th Activate the pressure control.

CONTROL SCREEN

1st The rectangular yellow buttons are for numeric constants input.

2nd Introduction of the density of ISO and POL (max. 5,000 min. 0,500).

3rd Total counter cycles is set to "0" by pressing the "RESET" button, or when reaching "9,999.999".

4th Cycles Preselection (max. 30.000).

5th Power control is to connect the main power to circuits of the machine.

6th Total counter material l, kg, lb, gal, is set to "0" by when changing units, pressing the "RESET" button, or when reaching 5000 l/kg, 11023 lb, 1320 gal.

7th Button for reset factory settings.

PARAMETERS SCREEN

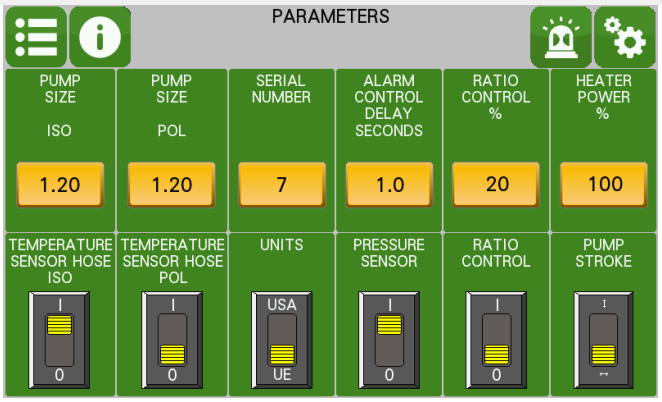

1st Introduce the ISO and POL pump size.

2nd Activation of the ratio control and adjustment of the pressure differential value (5/25%).

3rd Activation of the temperature sensor of the ISO and POL hose for the automatic control.

4th Activation of the pressure sensors to control the pressure.

5th Time delay for the activation of the alarm control ratio.

6th Selection of measurement units UE/USA (Bar,°C/psi,°F).

7th Selection the heater's power (50/100%).

8th Selection the pump stroke, horizontal/vertical.

ADJUSTMENT SCREEN

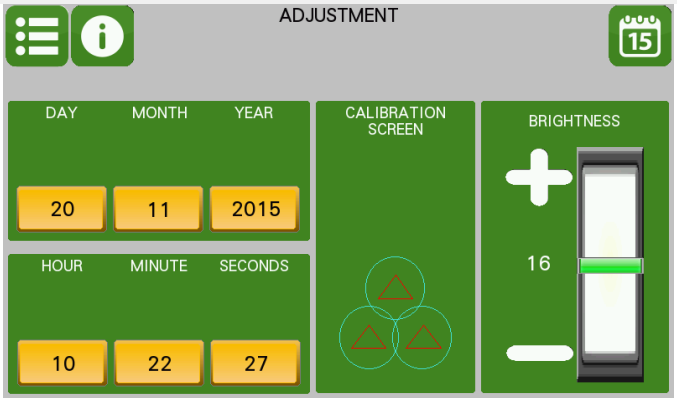

1st The rectangular yellow buttons are for numeric constants input.

2nd Set the date and time for the country where you are using the machine.

3rd Make a calibration of the touchscreen.

4th Adjust the brightness of the touchscreen.

SYSTEM SCREEN

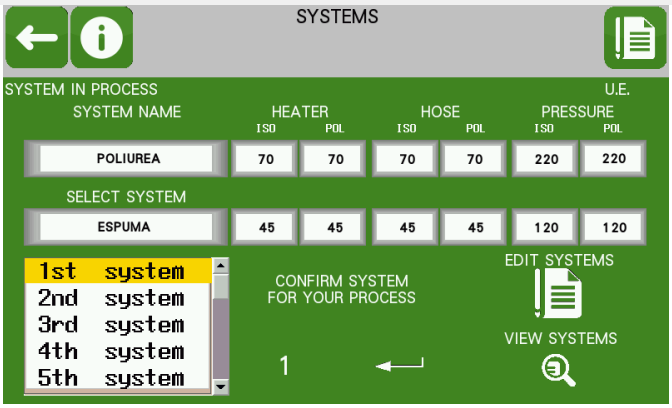

1st Select the required system and confirm it for further processing in automatic mode.

2nd Display the edit systems.

3rd Edit the new systems.

LOGGER SCREEN

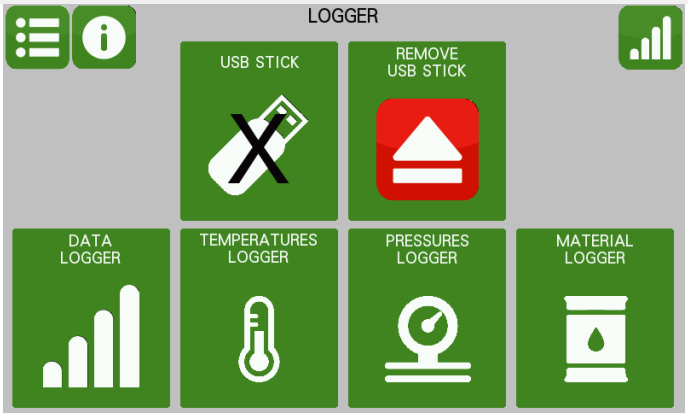

1st You can chek if the USB stick is connected or not.

2nd To remove the USB stick, the eject button have to be pressed.

3rd Display the chart data register (max. 60 minutes).

4th Display the chart temperature register (max. 60 minutes).

5th Display the chart pressure register (max. 60 minutes).

6th Display the chart material register (max. 60 minutes).

7th The displayed data will be erased when you switch off the machi

LOGGER REGISTER SCREEN

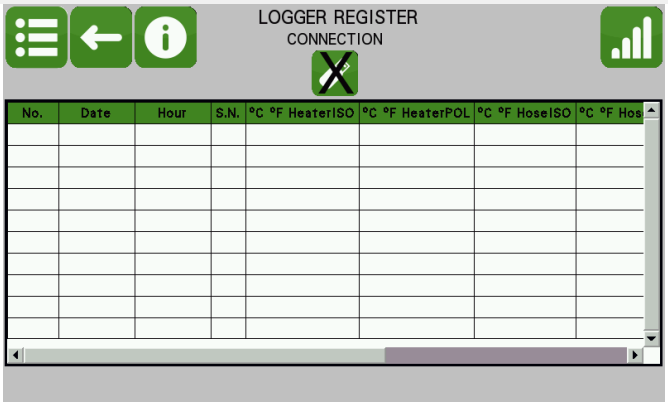

1st You can see view if the USB stick is connected.

2nd You can see view if there is an order of PLC for data logging.

3rd If there is data capture, you can see the information of every 2 seconds, and for the last recording hour.

4th You must have connected a USB stick to store the data generated by the machine, and then can be edited on a PC for interpretation. (format - csv) (event - alarm folder) (trend - data logger folder).

ETHERNET SCREEN

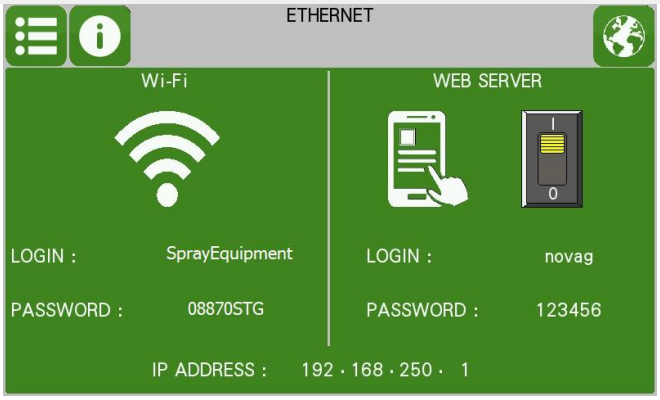

1° To modify the IP address, the WEB SERVER has to be disabled.

2° The last value of the IP address can be modified 192.168.250.xx to differentiate the machines in a network where there are more than one connected.
The first three values can not be changed 192.168.250.xx

3° The value of the IP address to be programmed can be from 11 to 99. Values from 2 to 10 can not be used.
The factory setting is 192.168.250.1

4° For the changes to take effect it is necessary to restart the system, machine and router.

ALARM SCREEN

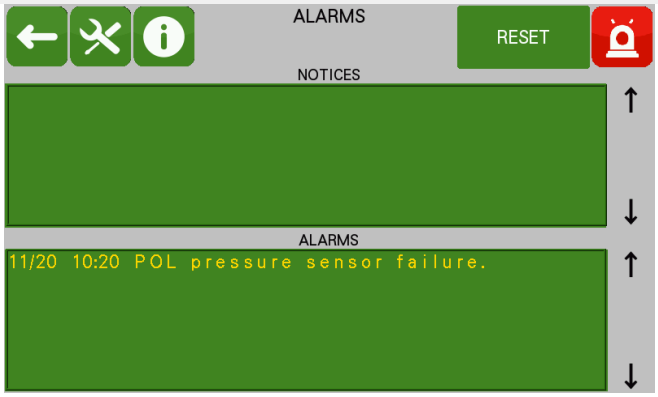

1st Warnings: the pop-up warning is displayed.

2nd Alarms: the emergent alarm is displayed, month and day, hour and minute of the activation alarm.

3rd Reset button to cancel the alarm, the text changes color if this is resolved.

4th Touching the message text of warnings or alarm, existing aid for warning or alarm is displayed.

5th Touching the keys " ↑ " or " ↓ " we can display messages or previous alarms.

ALARMS SUBSCREEN (TOOLS)

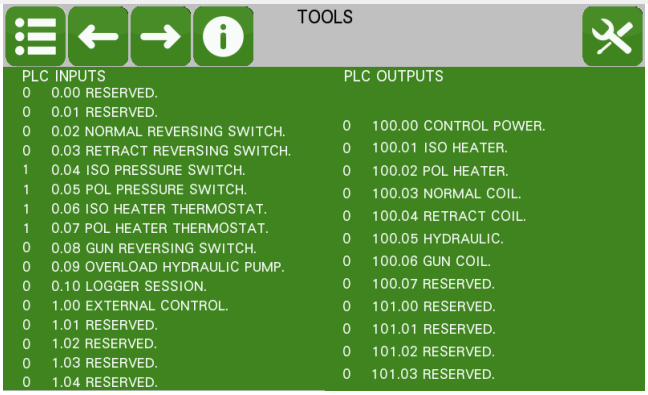

1st View status of digital inputs and outputs of PLC.

2nd View value of analog inputs and outputs of PLC.

3rd Sensor heater: value betwenn 50000 and 65550 value betlow 0°C.

4th "RESET" button to the oil change hydraulic counter, active when the text is in yellow.

5th Totalizer machine cycles, turns to "0" when the value is reached to "999,999.999".

6th View the version of software the PLC and the screen.

1st Connection for the external control of the machine.
- a/ Input to PLC 1.00: activate external control. Signal: +24Vdc kept.
- b/ Input to PLC 1.01: activate control power, start/stop. Signal: +24Vdc rising edge.
- c/ Input to PLC 1.02: activate the automatic start. Signal: +24Vdc rising edge.
- d/ Input to PLC 1.03: activate the automatic stop. Signal: +24Vdc rising edge.
- e/ Input to PLC 1.04: reset of the alarms. Signal: +24Vdc rising edge.
- f/ Output to PLC 101.00: ready machine.
- g/ Output to PLC 101.01: alarms.
- h/ Output to PLC 101.02: notices.
- i/ Output to PLC 101.03: time in course.

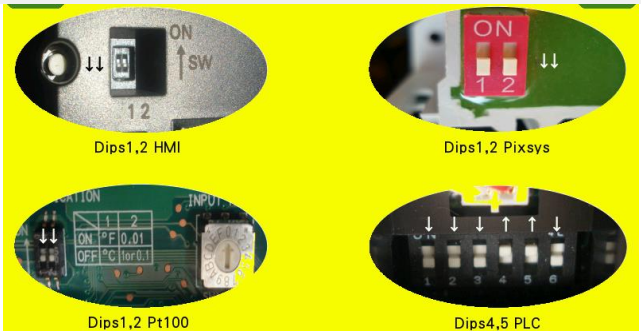

TOOLS SUBSCREEN (PID SETTINGS HEATERS)

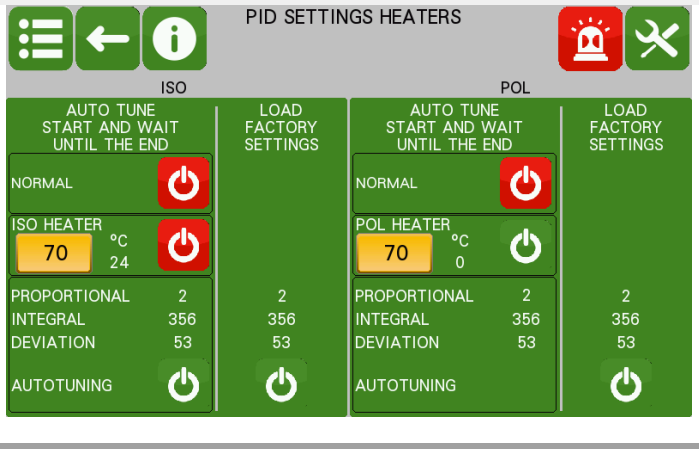

1st Load the values for the factory set PID parameters.

2nd Adjust the PID parameters for the heaters.

3rd For doing the autotuning, it is needed to:
a) Switch power control ON.
b) Switch hydraulic system ON.
c) Introduce the temperature value provided by the product manufacturer.
d) Activate NORMAL function.
e) Activate the heater (ISO, POL) for the side to do the autotuning.
f) Press the autotuning button and spray until the button turns back to green colour.

WARNINGS

Disconnect the unit from the main electric source before handle the internal electric console. The maintenance must be carried out by a qualified electrician.

1st Reduce pressure of the hydraulic power unit.

2nd Clean the product filters.

3rd Put on the gun a larger mixing chamber and module.

4th Verify ISO safety pressure switch wiring or pressure transducer.

5th If the pressure have been reduced on the manometers below 275 Bar or 3988 psi and the alarm persist, replace the pressure switch, or pressure transducer.

1st Reduce pressure of the hydraulic power unit.

2nd Clean the product filters.

3rd Put on the gun a larger mixing chamber and module.

4th Verify POL safety pressure switch wiring or pressure transducer.

5th If the pressure have been reduced on the manometers below 275 Bar or 3988 psi and the alarm persist, replace the pressure switch, or pressure transducer.

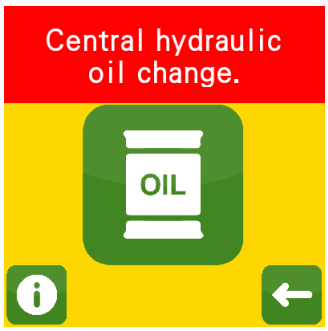

1st The preset lifetime given by the oil manufacturer has elapsed, it should be replace by one having the same characteristics.

2nd Do "RESET" on the maintenance counter from the control screen to set to "0" value.

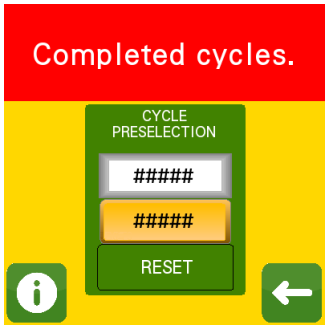

1st Your program cycles has elapsed..

2nd To repeat a session with the same cycles, push the reset button on the preselector.

3rd If do you want to cancel the cycles preselection, set the counter value to "0".

1st The machine does not reach the required pressure, you should increase the pressure of the hydraulic unit.

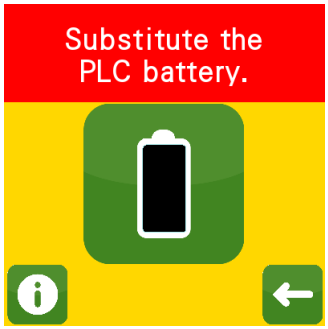

1st Replace the PLC battery, it is located nex to the leds operating. Replace with the PLC working.

2nd Open the protective cover, disconnect the connection 1, remove the battery, put the new battery and connect the connector 1.

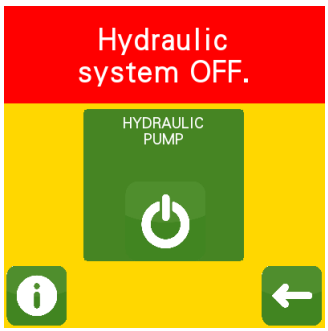

1° Connect the hydraulic system to activate the function of NORMAL or RETRACT.

Anomaly on the heating hoses.	1st Verify the status of the circuit breaker "F4" and (F5 POL hose), they have to be connected, they are located in the control panel. 2nd Verify the status of the circuir breaker "F6" and (F7 POL hose), they have to be connected, they are located in the hose transformer. 3rd Verify the hose power wiring connection. 4th Verify the triac wiring "U3" and (U4 POL hose), they are located inside the hose transformer. F4,(F5) F6,(F7) U3,(U4)
Control power OFF.	1st Press the control power button.
Pressure sensors OFF	1st To activate the pressure controls, the machine must have pressure sensors installed, and must be activated on the display of parameters.
Temperature sensor hoses OFF.	1st To initiate operation automatically, the machine must be installed with at least one temperature sensor ISO hose, (POL) or both, and must be activeted on the display of parameters, the choice of the temperature sensors hose ISO, (POL) or both.

Release product pressure.	1st Release product pressure. 2nd Open the recirculation.
Lower the temperature of the hoses in the systems.	1st Hose temperature in the system is higher than in the heaters. (maximum 80°C, 176°F).
ISO low pressure.	1st Product input (ISO) below 10 Bar, 145 psi. 2nd Verify the performance of the ISO transfer pump. 3rd Verify that manual valve of the input products ISO is open. 4th Verify that ISO manometer is above 10 Bar, 145 psi. 5th Verify or replace the ISO pressure transducer.
POL low pressure.	1st Product input (POL) below 10 Bar, 145 psi. 2nd Verify the performance of the POL transfer pump. 3rd Verify that manual valve of the input products POL is open. 4th Verify that POL manometer is above 10 Bar, 145 psi. 5th Verify or replace the POL pressure transducer.

Soltar el gatillo de la pistola. (2seg.)	1st Has to free the trigger of the gun by an upper time to two seconds.
ISO empty tank.	1st To continue the projection with control of material in the drum, fill up or replace the drum of ISO, activate the key ON in the material screen, and activate the NORMAL function. 2nd To continue the projection without control of material in the drum, do reset of the warning, and activate the NORMAL function.
POL empty tank.	1st To continue the projection with control of material in the drum, fill up or replace the drum of POL, activate the key ON in the material screen, and activate the NORMAL function. 2nd To continue the projection without control of material in the drum, do reset of the warning, and activate the NORMAL function.
Hose system overloaded.	1st Reduce the length of the hose. 2nd Verify inside the transformer if you can increase the voltage output. Transformer output voltage of 5000VA = 45V / 90V. Transformer output voltage of 3750VA = 40V / 75V. 3rd Reduce the amps in the temperature display.

ALARMS

1st Higth temperature alarm of the ISO heater.

2nd Verify that the PLC entrance "00.06" is illuminated.

3rd If the heater is hot over "120ºC" or " 248ºF", let it cool.

4th Verify the electric connection of the safety thermostat, repair the wiring if it is in poor condition.

5th Replace the safety thermostat.

6th Replace the static relay "U1" of the dashboard.

1st Higth temperature alarm of the POL heater.

2nd Verify that the PLC entrance "00.07" is illuminated.

3rd If the heater is hot over "120ºC" or " 248ºF", let it cool.

4th Verify the electric connection of the safety thermostat, repair the wiring if it is in poor condition.

5th Replace the safety thermostat.

6th Replace the static relay "U2" of the dashboard.

1st Overload alarm of the hydraulic pump.

2nd Rearm the circuit breaker "F8" on the dashboard.

3rd Verify the electrical connection of the hydraulic motor, repair the wiring if it is in poor condition.

4th Verify by a qualifield electrician the electrical consumption of the engine, it must not exceed the amps indicated in the nameplate.

1st RETRACT reversing switch alarm.

2nd Verify that the entrance of the PLC "00.02" and "00.03" are not illuminated at the same time.

3rd Verify the status of the reversing switches located between the hydraulic cylinder and POL pump.

4th Verify the electrical connection of the reversing switches, repair the wiring if it is in poor condition.

5th Replace the reversing switch RETRACT.

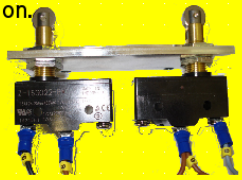

1st Sensor alarm of the ISO heater temperature.

2nd Verify electrical connection of the temperature sensor, repair the wiring if it is in poor condition.

3rd Replace the ISO heater temperature sensor, the sensor must be touching the heating rod.

1st Sensor alarm of the POL heater temperature.

2nd Verify electrical connection of the temperature sensor, repair the wiring if it is in poor condition.

3rd Replace the POL heater temperature sensor, the sensor must be touching the heating rod.

1st Sensor alarm of the ISO pressure.

2nd Verify electrical connection of the pressure sensor,
repair the wiring if it is in poor condition.

3rd Replace the ISO pressure sensor.

4th Stop the sensors of pressure in the screen of parameters.
They will stop the controls by pressure and the ratio.

1st Sensor alarm of the POL pressure.

2nd Verify electrical connection of the pressure sensor,
repair the wiring if it is in poor condition.

3rd Replace the POL pressure sensor.

4th Stop the sensors of pressure in the screen of parameters.
They will stop the controls by pressure and the ratio.

1st Sensor amps alarm on the ISO transformer.

2nd Verify electrical connection of the amps sensor,
repair the wiring if it is in poor condition.

3rd Replace the ISO amps sensor.

1st Sensor amps alarm on the POL transformer.

2nd Verify electrical connection of the amps sensor,
repair the wiring if it is in poor condition.

3rd Replace the POL amps sensor.

1st Sensor alarm of the ISO hose temperature.

2nd Verify the electrical connection of the temperature sensor,
repair the wiring if it is in poor condition.

3rd Replace the temperature sensor of the ISO hose.

4th Stop the temperature sensor of the hose ISO in the parameters screen.
It will stop the temperature control.

1st Sensor alarm of the POL hose temperature.

2nd Verify the electrical connection of the temperature sensor,
repair the wiring if it is in poor condition.

3rd Replace the temperature sensor of the POL hose.

4th Stop the temperature sensor of the hose POL in the parameters screen.
It will stop the temperature control.

1st Control ratio alarm.

2nd If the pressures are unbalance increase the "%" of the ratio on the parameter screen.

3rd Increase the delay time to check ratio control in the parameter screen.

4th If the alarm persists, and the result of the projection is correct, you may cancel the ratio control.

1st ISO hose heater system alarm.

2nd There is a consumption higher than 50 amps.
a/ Verify inside the transformer if you can reduce the voltage output.
Transformer output voltage of 5000VA = 45V / 90V.
Transformer output voltage of 3750VA = 40V / 75V.
b/ There is installed at least one 15m hose section.
c/ Replace the triac located inside the hose transformer.

3rd Consumption in the hoses is detected when heating hose is off.
Replace the triac located inside the hose transformer.

1st POL hose heater system alarm.

2nd There is a consumption higher than 50 amps.
a/ Verify inside the transformer if you can reduce the voltage output.
Transformer output voltage of 5000VA = 45V / 90V.
Transformer output voltage of 3750VA = 40V / 75V.
b/ There is installed at least one 15m hose section.
c/ Replace the triac located inside the hose transformer.

3rd Consumption in the hoses is detected when heating hose is off.
Replace the triac located inside the hose transformer.

1st Communication fault on the internal network, verify if the Switch network is giving a fault, red LED 6 light.

2nd Verify which outlet is not communicating, the have to be connected, the led will be blinking for the operating outlets.
Connection 1 for the PLC communication, Dip 1 with ON.
Connection 2 fot the screen communication, Dip 2 with ON.
Connection 5 for the external communication, Dip 5 with OFF.

1st NORMAL reversing switch alarm.

2nd Verify that the entrance of the PLC "00.02" and "00.03" are not illuminated at the same time.

3rd Verify the status of the reversing switches located between the hydraulic cylinder and POL pump.

4th Verify the electrical connection of the reversing switches, repair the wiring if it is in poor condition.

5th Replace the reversing switch NORMAL.

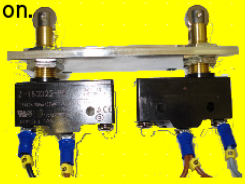

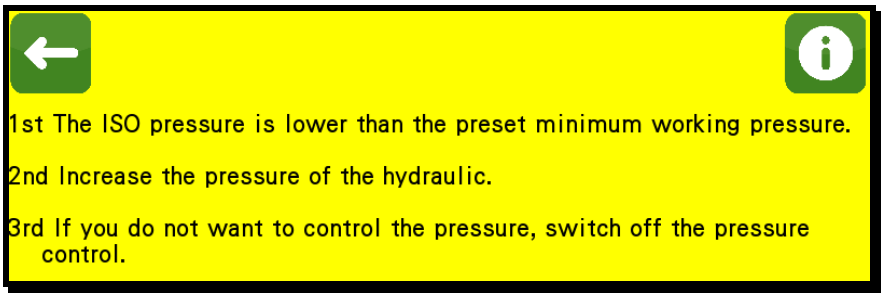
1st The ISO pressure is lower than the preset minimum working pressure.
2nd Increase the pressure of the hydraulic.
3rd If you do not want to control the pressure, switch off the pressure control.

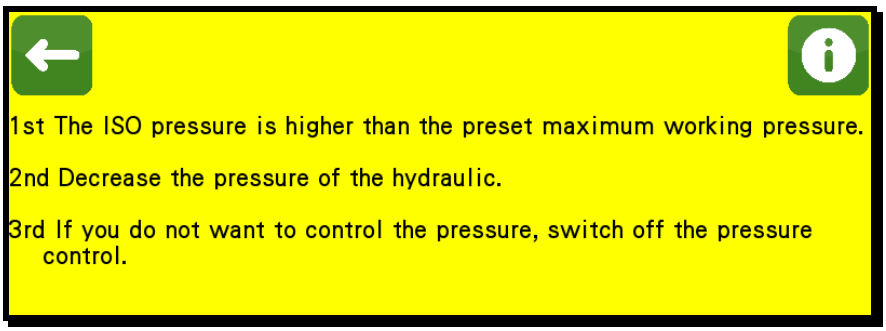
1st The ISO pressure is higher than the preset maximum working pressure.
2nd Decrease the pressure of the hydraulic.
3rd If you do not want to control the pressure, switch off the pressure control.

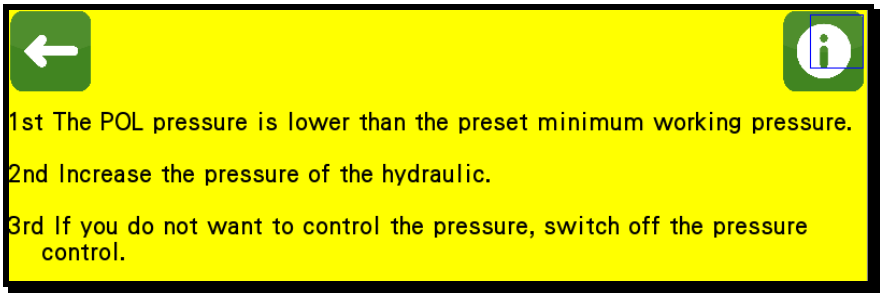
1st The POL pressure is lower than the preset minimum working pressure.
2nd Increase the pressure of the hydraulic.
3rd If you do not want to control the pressure, switch off the pressure control.

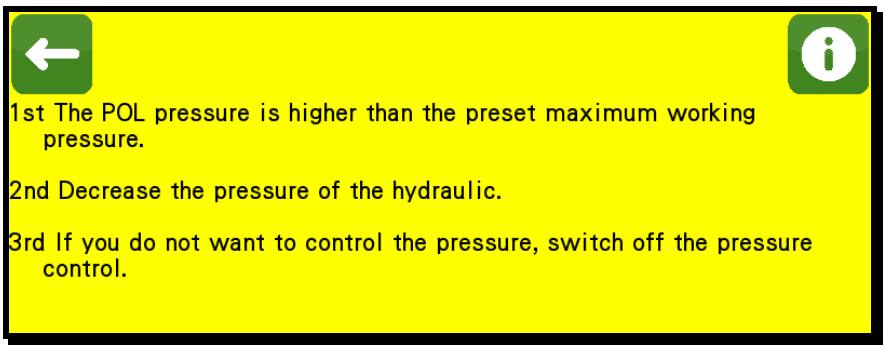
1st The POL pressure is higher than the preset maximum working pressure.
2nd Decrease the pressure of the hydraulic.
3rd If you do not want to control the pressure, switch off the pressure control.

NOVAG PLUS WI-FI COMMUNICATION KIT

Description

This machine has the option to incorporate a wi-fi router (KT-00125), on which you can connect a mobile phone or tablet device to the Unit. With this tool, you can view and remotely control the Unit to which the router is connected.
This tool is compatible with iOS and Android operating systems.
The kit contains:

- 1x Router Wi-Fi (***EL-00171-10***)
- 1x ethernet cable 5m (***EL-00171-09***)

Installation & Setup

Connect the machine (Ethernet connector on bottom side of electrical console) to principal port of the PicoStationM2 with a Ethernet cable CAT5 o 6 (supplied).

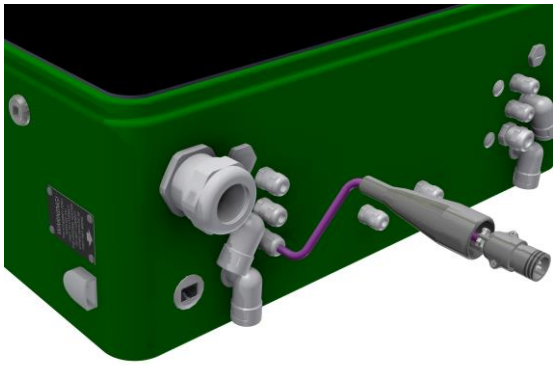

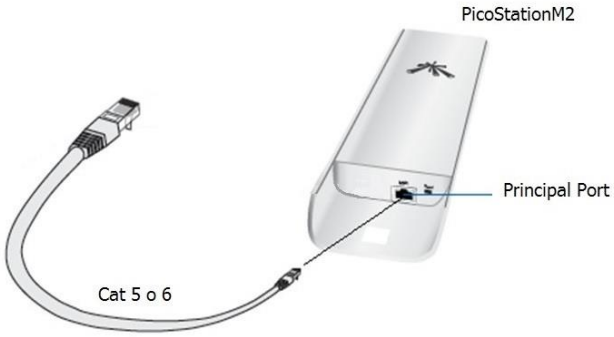

WARNING! The Ethernet port supplies 24V. Only connect the novaG router. Do not connect other devices as they my break.

Go to ETHERNET screen in the software of the Unit and turn ON the switch WEB SERVER.

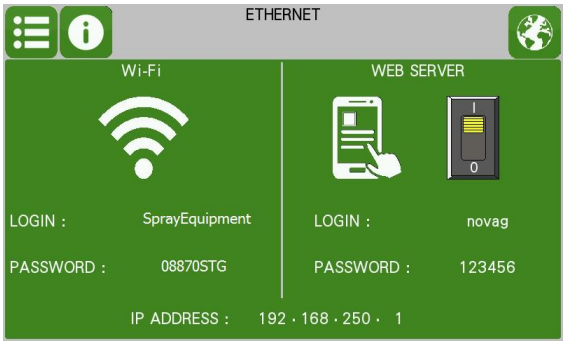

Wi-Fi Connection Setup for iOS systems

<table>
<tr><td>Turn Off the Mobile Data</td><td>In the Wi-Fi configuration screen, select the symbol information of the SprayEquipment network</td><td>In the SprayEquipment configuration screen, put in the static IP 192.168.250.10 and the Getaway 255.255.255.0</td></tr>
<tr><td> 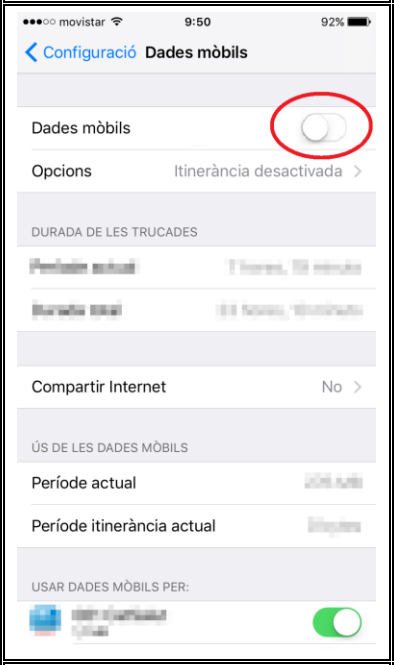
</td><td>
</td><td>
</td></tr>
<tr><td>Select Access to network</td><td>Put in the Password 08870STG</td><td>Established connection</td></tr>
<tr><td> 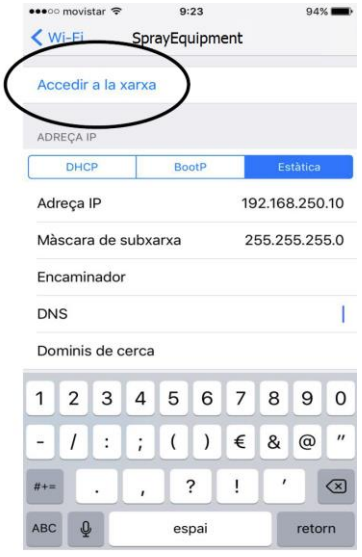
</td><td>
</td><td>To operate the unit with this device, go to Method of Operation with Mobile Devices</td></tr>
</table>

Wi-Fi Connection Setup for Android systems

Turn Off the **Mobile Data**	In the Wi-Fi networks screen, select the **SprayEquipment** network	In the access screen of the network **SprayEquipment**, put in the Password **08870STG** and activate the box **Show Advanced Options**
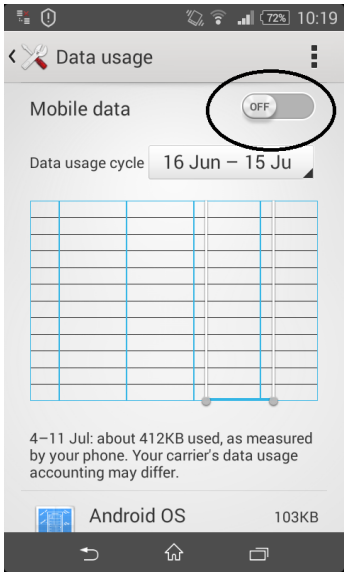	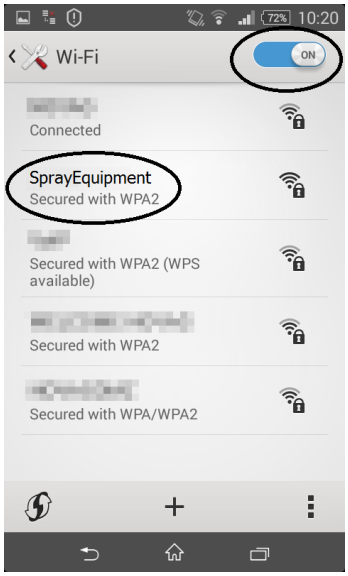	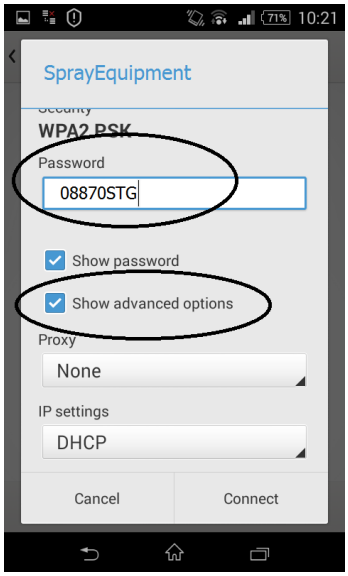
In same screen, in the **DHCP** section of the **IP Adjustments**, select **Static**	In the Static IP direction, put in **192.168.250.10** and the value for Getaway **255.255.255.0** and finally, select **Connect**	Established connection
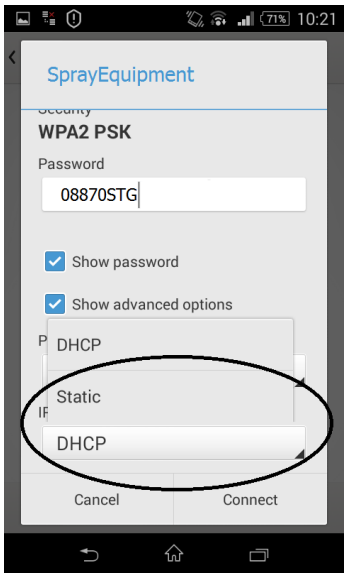	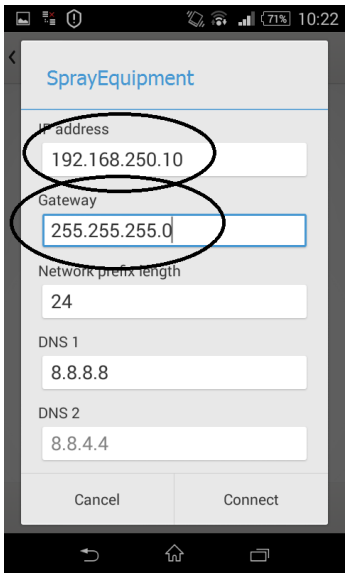	To operate the unit with this device, go to **Method of Operation with Mobile Devices**

Method of Operation with Mobile Devices

When the Wi-Fi connection are established, go to web browser and put in the direction **192.168.250.1**, then push **Search**	Enter User Name **novag**, Password **123456** and push **Access or Connect**
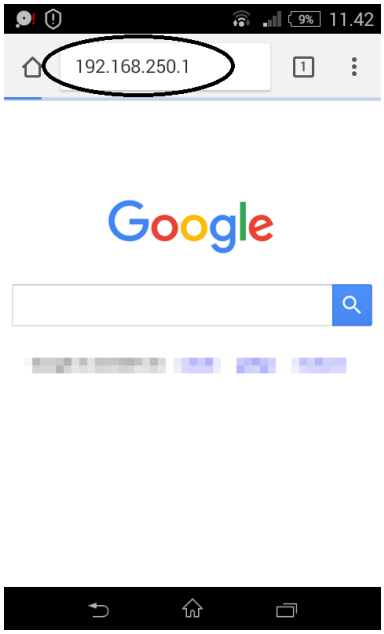	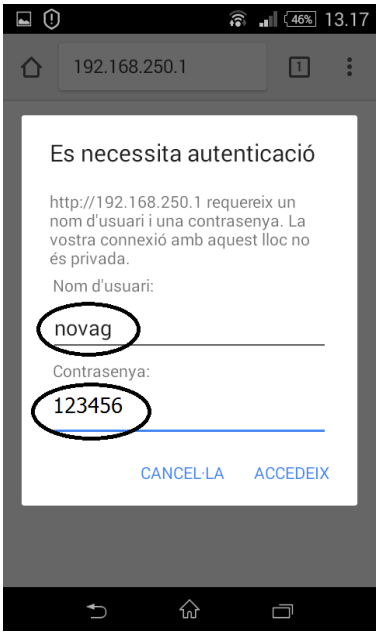
If appears this screen, select **Operation** option	At this moment, you have the control of the Unit with your mobile device
	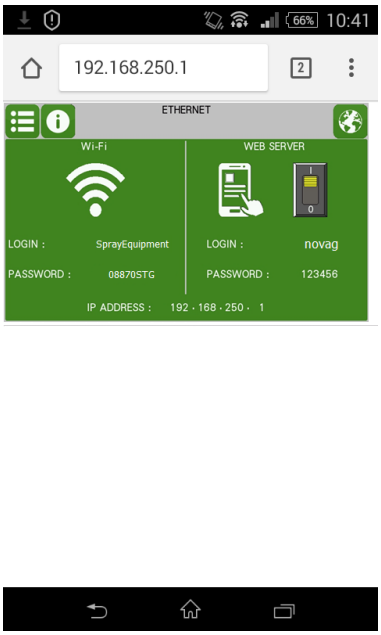

Valid for both systems, iOS and Android.

INSTALLATION

PRECAUTION! ***Use suitable protection and follow the recommendations in the safety information provided by product suppliers when installing or working with the unit.***

HI-TECH provides a series of tools and accessories necessary for assembling the machine. The kit is made up of the following elements:

BI-00009	Tube of grease Lubriplate 1.75 oz./ 49 gr	1x
EL-00051-00	TCS for ISO hose & longer RESIN hose	1x
EM-00006	CD with Manuals	1x
HT-00001	Magnet holder tools	1x
KT-00040-PKG	Kit adaptation Fast-Lock	1x

Inside the console there is a terminal strip for connecting the principal electrical wire (not supplied) to the unit. The electrical connection of the unit must only be carried out by a qualified electrician.

NB: ***To ensure that the unit works correctly, the electrical supply must meet the specifications indicated on page six of this manual and appearing on the machine specifications plate.***

Follow the recommended procedure in the indicated order to install the unit:

a) Insert the main power cable by passing it through the wire stop at the bottom of the electrical console and connect as shown in the diagram.

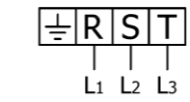

3PE~400V 50/60Hz

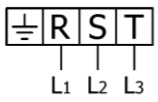

3PE~230V 60Hz

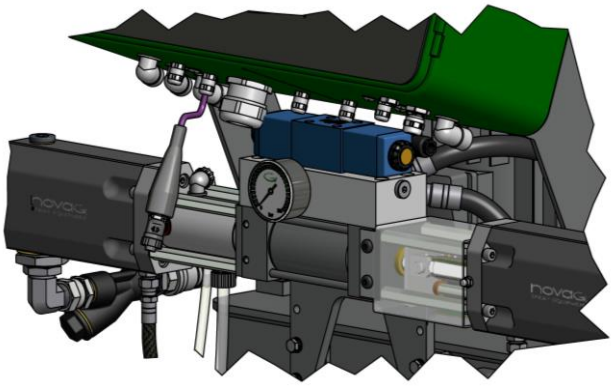

Make sure the power cable is disconnected from the mains source before connecting it to the terminal strip in the console.

b) Load 63 litres (16.6 gal) of hydraulic fluid into the tank of the unit. The oil must be of the characteristics and specifications of DIN 51524 standard, sections 1 and 2 (for example. ISO VG 46).

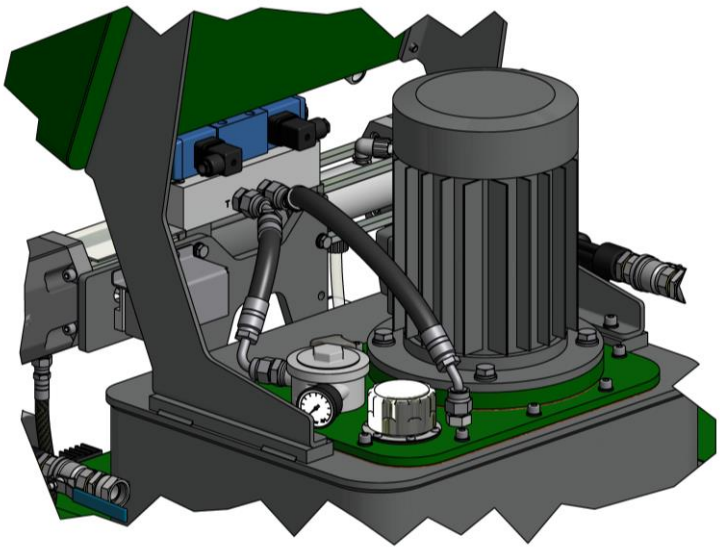

PRECAUTION! ***Do not fill the tank to maximum capacity (81 Lts. – 21.4 gal); make sure the amount of oil is not more than 78% of its maximum capacity (63 Lts. – 16.6 gal). Use the visual level indicator of temperature on the tank as a reference, because the maximum temperature limit (80ºC – 176ºF) coincides with the advised capacity.***

c) Check the hydraulic pump oil level: take off the fitting from the pump and check that the oil level reach the entrance of the tank. Add more oil if were necessary and place the fitting again.

d) Fill the lube reservoir of the Isocyanate pump with DOTP. It is not necessary to prime the system.

e) Connect the hoses of the products to the outlets of the respective heaters (the Isocyanate hose to the Isocyanate heater and the Polyol hose to the Polyol heater).

NB: ***The product hoses have been identified with red (Isocyanate) and blue (Polyol), enabling them to be rapidly distinguished. To avoid errors in connecting the coupling connectors of the Isocyanate and Polyol hoses, the connectors are of different sizes to make it impossible for connections to be swapped.***

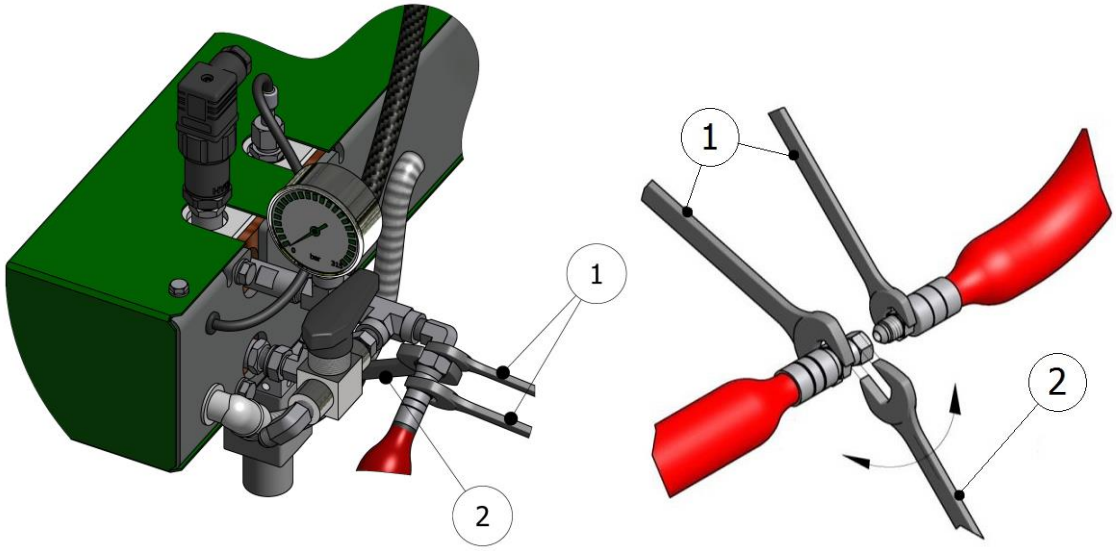

Figure 2. Method of Union for Hoses

WARNING! ***To join the hoses together or to connect them to the heaters or the gun, use two spanners to hold the parts to be joined (1) and a third spanner to tighten or loosen the connecting nut (2) as shown the illustrations. The connections must be tightened to a torque of 20 Nm.***

The hoses receive vacuum drying treatment and are supplied interconnected at the ends to prevent them from absorbing moisture. Do not separate them until they are going to be installed in the unit.

The hose connection system includes special terminals (fast lock) to facilitate the electrical connection to the transformer and between the different sections installed in the unit.

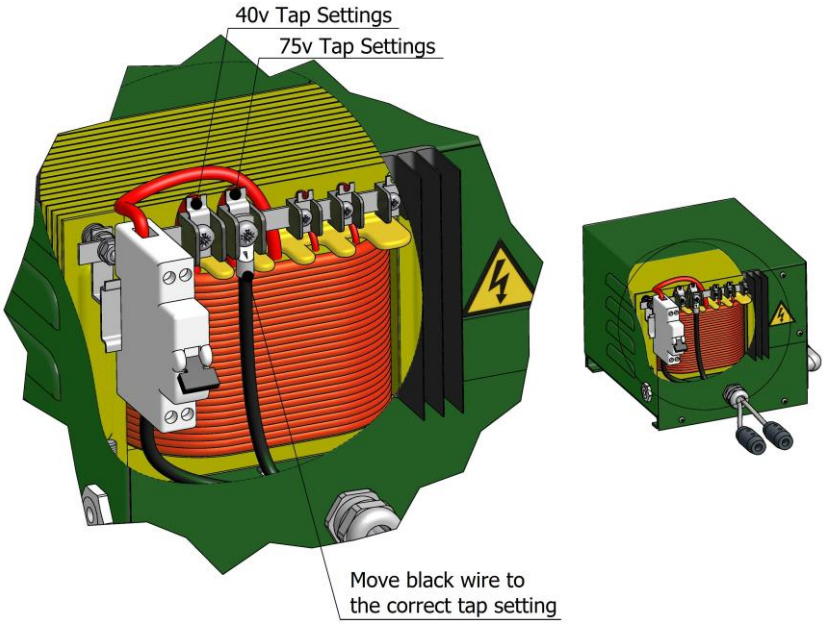

The transformer offers the option of connecting to a 40 V output voltage valid for a total hose length of up to 48 meters (158 ft), or an output voltage of 75 V, for hose lengths exceeding 48 meters (158 ft) to 93 meters (305 ft). Connect to one output voltage or the other depending on the total hose length installed. Before starting up the unit, make sure that the connection made in the factory adapts to the total length of hose installed. If you add or eliminate sections of hose, make sure the output voltage of the transformer to which it is connected is suitable for the resulting total length. Otherwise, change the connection.

f) Connect the heated hoses wires to the “fast lock” connector coming out of the hose transformers as follow:
   a. Unscrew the Nylon Safety Plug from the “fast lock” connector body.
   b. Unscrew partially the Socket Head Set Screw from electrical wires.
   c. Insert the heated hose electrical wire with terminals into the “fast lock” connector body.
   d. Tighten the Socket Head Set Screw of the terminals and place the Nylon Safety Plugs

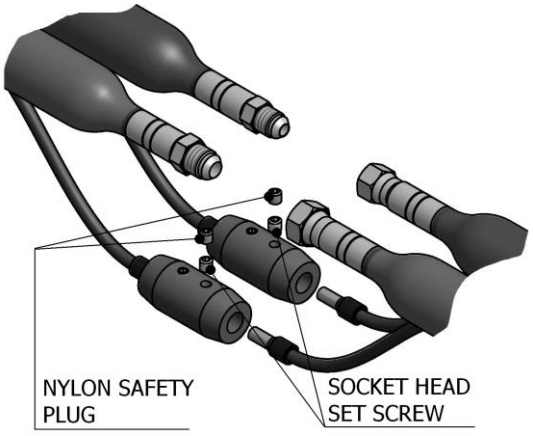

   Repeat the same steps to connect the “fast lock” that you will find in the middle hose connections

g) Connect the rest of the product hoses to complete the required length. Remember that the hoses are identified with red (Isocyanate) and blue (Polyol).

NB: To protect the TCS sensor, you must pay special attention not to kink or excessively bend the hoses.

h) Install the probe of control of temperature TCS between the last stretch of hose of product and the final stretch connected to the gun. Stretch carefully the cable of the probe inserting it in the Isocyanate hose.

i) Wind the connector of the probes to the connector of the hose. Realize so many connections as stretches of 15 m hose you have.

j) Realize the connections between the connector of exit of the probe TCS of the first stretch of hose and the connector proceeding from the machine.

k) As soon as the connections were completed, place the protections for the union fixing them with three plastic bridles. Later cover the union with the ends of the cases.

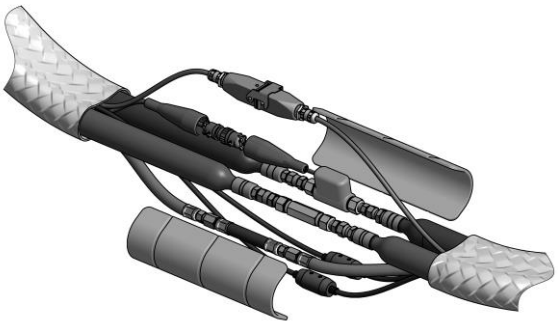

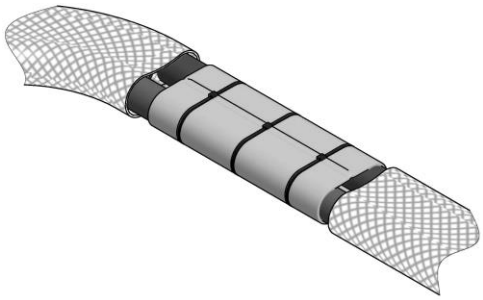

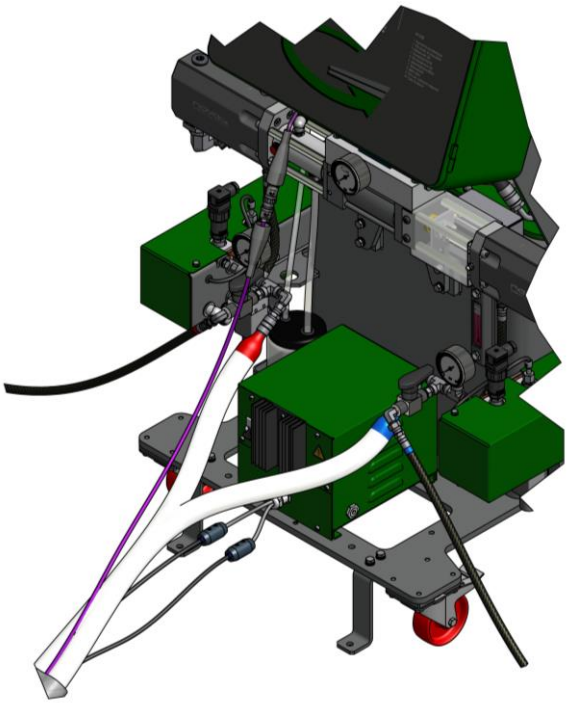

NB: ***To protect the TCS sensor, you must pay special attention not to kink or excessively bend the hoses. Do not roll up the hoses with a radius of under one meter / 4 feet.***

l) Connect the air hoses.

m) Connect the hoses to the connectors of the coupling block of the gun, making sure that the manual valves are closed.

Having performed the above operations, you must note the direction in which the motor turns. To make sure that it is turning clockwise, do the following:

a) Turn the hydraulic pressure regulator counter clockwise.
b) Turn the general switch ON. The top pilot light will come on.
c) Press the POWER CONTROL key .In the screen, it will change to colour .
d) Go to the side of the machine to be able to see the motor fan. Press the MOTOR key to start the motor and press it again to stop it. Check that the blades of the fan are turning clockwise, otherwise turn the general switch OFF and disconnect the machine from the source of electrical supply.
e) Open the console of the control panel and change the position of two of the three wires of the electrical connection of the unit. Check the turning direction once more.

Proceed to install the transfer pumps paying special attention to connect each pump to **"its"** respective product, as changing the pumps would cause a reaction in the products inside them and make them useless. Identifying each pump with a tape of the same colour as that of the hoses (blue for the Polyol pump and red for the Isocyanate pump) might be a good method for avoiding errors in connection.

Do the following steps to install the pumps:

a) Make sure that the inlet valves of the products to the unit are closed.
b) Connect one end of the Polyol hose (¾" thread) to the Polyol valve and the other end to the transfer pump of the same product.
c) Connect one end of the Isocyanate hose (½" thread) to the Isocyanate valve and the other end to the transfer pump of the same product.
d) Connect the air hose to the transfer pumps.
e) Install the unit ground connection. The movement of the product inside the hose can cause static electricity and produce electrical discharges.

Before using the unit, the residual air and oil from factory testing must be eliminated. To purge the whole circuit, proceed as follows:

f) Pressurize the transfer pumps and open the inlet ball valves. Make sure there are no leaks.
g) Turn the hydraulic pressure regulator counter clockwise.
h) Turn the general switch ON. The top pilot light will come on.
i) Press the POWER CONTROL key, it will change to red to colour .
j) Hold the coupling block with the outlet of each product in separate vessels and open the manual valves of each product.
k) Press the HYDRAULIC PUMB key , it will change to colour .
l) Press the NORMAL key , it will change to colour .
m) If were necessary, turning the regulator clockwise, would increase the hydraulic pressure until the product pumps begin to move slowly.

n) Allow the materials to come out of the coupling block until the residual oil and the air bubbling has disappeared completely.
o) Close the manual valves of each product and clean the coupling block of the remains of product.
p) Slowly increase the hydraulic pressure to check for product leaks in the hose joints. Retighten if necessary and tape the connectors to protect them from possible damage.
q) Press the NORMAL key. The led will go out.
r) Place the gun in the coupling block.

START - UP PROCEDURES

Follow the recommended procedure in the indicated order.

PRECAUTION! ***The start-up procedures assume that all of the necessary adjustments have been correctly performed.***

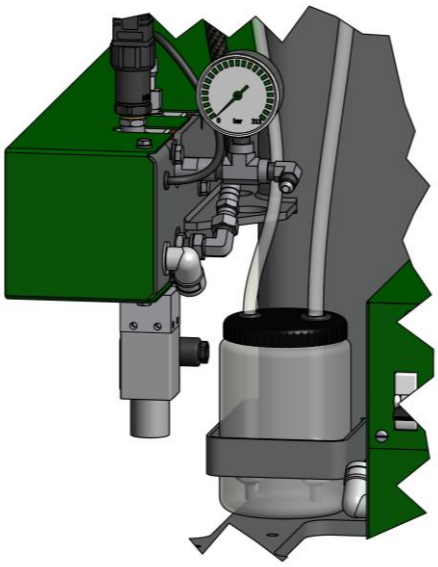

a) Check the state of the DOTP plasticizing oil in the lubrication tank of the Isocyanate pump. Change the oil if you see changes in the colour or signs of solidification.

b) Check the hydraulic oil level. Add oil if the level is low.

c) Make sure that the chemical products to be processed are above the minimum temperature required to be supplied to the unit through the transfer pumps. Ask your product supplier for information on the minimum supply temperature.

d) Check the input filters of the products. Clean them if necessary.

e) Pressurize the two transfer pumps and open the inlet valves of the products to the unit.

f) Turn the general switch ON. The LED of tactile screen will light up.

g) Press the CONTROL POWER key on the control screen, it will change to .

h) Press the ISO/POL HOSES TEMPERATURE keys , it will change to , and once reached the temperature, press the ISO/POL HEATERS TEMPERATURE key , it will change to . A red pilot light indicates that the machine is heating.

i) With the +/- keys, is possible to set up the temperature. With the one transformer machine model, only select the amperes from ISO.

According to following table, the values of intensity to reach the temperature depending on each application, are:

30 A	**38º C**	**100º F**
35 A	**48º C**	**118º F**
40 A	**60º C**	**140º F**
45 A	**75º C**	**167º F**
50 A	**80º C**	**176º F**

PRECAUTION! ***To avoid excessive pressure in the heating hoses, wait for the product in them to reach the required temperature before starting up the hydraulic system.***

j) Press the HYDRAULIC PUMP key , located on the manual screen. The key will light .

k) Press the NORMAL key located on the manual screen. The led will light . One of the direction indicator lights will come on and the dosing pumps will begin to move.

l) Using the hydraulic pressure regulator, adjust the required pressure and check the pressure of each dosing pump on their respective gages on the machine outlet.

Regulate the hydraulic system so that the output pressure of the unit never exceeds the pressure of work of the installed product hoses.

The pressures must be practically the same and remain constant. The directional indicator lights must remain with one on and the other out. The lit lamp indicates the direction of movement of the pumps.

If the pressure fluctuates on either stroke, consult the fault section before continuing.

m) Connect the air supply to the gun; open the manual valves of each product; make a test projection and check the pressures on the product gages. If the projection test is correct and the pressures remain equal, proceed with the application.

SHUTDOWN PROCEDURES

Follow the recommended procedure in the indicated order for machine shut down when work is stopped for the day.

a) Press the RETRACT key. The led will light .
b) Use the gun to project into a waste container until the Isocyanate metering pump is in the retract position and the pressure begins to fall.

PRECAUTION! ***To avoid possible seal weep age and the early failure of the pump seals, the pressure must not be reduced to zero. It is recommended to keep the system with a minimum pressure of 30 bar (400 psi) to extend the life of the seals.***

c) Press the MOTOR key. The key will light.
d) Press the ISO and RESIN keys under the heater temperature display. The two keys will light .
e) Press the ISO key under the HOSES display. The led will go out. In machines fitted with two transformers, the ISO and RESIN keys must be pressed. The two keys will light .
f) Press the POWER CONTROL key. The key will light .
g) Turn the general switch OFF. The top pilot light will go out.
h) Close the inlet ball valves.
i) Close the supply to the transfer pumps.
j) Disconnect the air supply to the transfer pumps
k) Close the manual valves of the coupling block and remove the gun to perform the corresponding maintenance.

CLEANING

PRECAUTION! ***The unit includes components that reach temperatures that are liable to cause burns. The hot parts of the unit must not be handled until they have cooled.***

To avoid possible contamination, the circuits of the unit must previously be cleaned (pumps, heaters and hoses) whenever applications have to be made that require a change of components.

Follow the recommended procedure in the order indicated to perform the cleaning when you have to change the components of the system:

a) Place two drums of DOTP cleaning agent close to the machine.
b) Dismantle the gun and leave the coupling block connected to the hoses.
c) Remove the transfer pumps of the product drums and place them in the drums of the DOTP cleaning agent.
d) Place a vessel under the coupling block to gather up the products contained inside the machine.
e) Open the manual valves on the coupling block and press the MOTOR and NORMAL keys to start up the metering pumps.
f) Allow the products to come out until you see that only DOTP cleaning agent comes out free of impurities.
g) Close the valves on the coupling block and deactivate the MOTOR and NORMAL keys .
h) Place the transfer pumps in the drums of the new products.
i) Place a vessel under the coupling block to collect the DOTP cleaning agent.
j) Open the valves on the coupling block and press the MOTOR and NORMAL keys to start up the dosing pumps.
k) Allow the DOTP cleaning agent to come out until you see that only the new products come out.
l) When the products come out without the contamination produced by the effect of the DOTP cleaning agent, the cleaning process is complete and you can proceed as normal.

LONG TERM SHUTDOWN PROCEDURES

PRECAUTION! ***The unit includes components that reach temperature that are liable to cause burns. The hot parts of the unit must not be handled until they have cooled.***

When you plan to shut down the machine for more than FOUR weeks, the products contained in the machine must be replaced by DOTP plasticizing agent.

Follow the recommended process in the order indicated, to change the products for DOTP oil:

a) Place two drums of DOTP cleaning agent close to the machine.
b) Dismantle the gun and leave the coupling block connected to the hoses.
c) Remove the transfer pumps of the product drums and place them in the drums of the DOTP cleaning agent.
d) Place a vessel under the coupling block to gather up the products contained inside the machine.
e) Open the manual valves on the coupling block and press the MOTOR and NORMAL keys to start up the dosing pumps.
f) Allow the products to come out until you see that only DOTP cleaning agent comes out free of impurities.
g) Deactivate the MOTOR and NORMAL keys, close the valves on the coupling block, turn the general switch OFF, disconnect the supply system of the transfer pumps and the process is finished. The metering pumps, the heaters and the hoses must be full of DOTP plasticizing oil. Never leave the machine or the hoses empty of product or DOTP plasticizing oil.

NOTE: ***Never use liquids not recommended or not approved by HI-TECH. Never use approved liquids that have been contaminated with water or ISO/POL. If you are not sure in the quality of the liquid you are going to use we strongly recommend that you check the machine 2-3 times every 2 weeks after you have filled it by recirculating through heated hoses (see p.55) with fresh plasticizer unless you make sure the liquid that comes out is completely pure and clean.***

TROUBLESHOOTING

The **novaG - III** unit has been designed and built to withstand severe working conditions with a high degree of reliability, provided it is used suitably. This chapter contains information on possible faults that may prevent the continuation of work with the unit. The information provided must serve as guideline to detect and resolve the large majority of the problems before calling for the assistance of the authorized distributor or **HI-TECH** technical service. In any case, feel free to contact the technical assistance service of **HI-TECH SPRAY EQUIPMENT**, where a qualified technician will advise you on whatever you may need.

All repairs performed by unqualified personnel or the use of spares other than originals may cause damage to the unit and put the operator at risk.

To prevent possible bodily harm caused by incorrect handling of the raw materials and solvents used in the process, carefully read the safety information provided by your supplier.

Deal with the waste caused according to current regulations.

Disconnect the unit from the power supply before carrying out any operation inside the electrical console.

The electrical maintenance of the machine must only be performed by a qualified electrician.

To avoid damage caused by the impact of pressurized fluids, do not open any connection or perform maintenance work on components subject to pressure until the pressures have been completely eliminated.

Use suitable protection when operating, maintaining or remaining in the operating area of the unit. This includes, but is not limited to, the use of face masks, protective goggles, gloves, shoes and safety clothing.

The unit includes components that reach temperature that are liable to cause burns. The hot parts of the unit must not be handled until they have cooled.

To prevent serious harm by crushing or loss of limbs, do not work with the unit without the safety duly installed on all moving parts. Make sure that all of the safety protections are correctly fitted after all repair or maintenance work.

Heaters

WARNING! ***Before resolving any kind of defect, make sure all of the pushbuttons are off, that the general switch is in shutdown position and that the unit is disconnected from the power supply. Never handle the inside of the control panel with the unit connected to the power supply. The heaters are components that reach high temperatures; wait until they have cooled before handling.***

NB: ***The thermostat is a safety element in contact with the heater. If the temperature exceeds 120º C (248º F) the thermostat will cut off the electric supply by deactivating the POWER CONTROL. The thermostat will not reset until the temperature in the heater is below 120º C (248º F).***

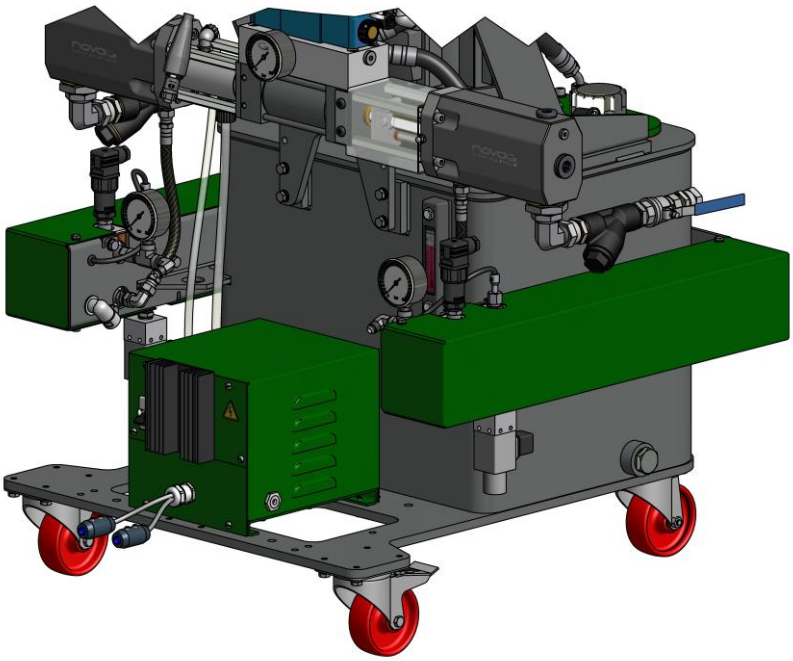

Follow the recommended procedure in the order indicated, to try to solve the problem and avoid costly repairs. Make sure all the automatic switches and control elements are in the correct working position before determining the existence of a fault.

To check the state of the element, proceed as follows:

With the main switch off check with a tester that reading the total value of the heater resistance is indicated in the table according to the power, voltage and number for each installed heater elements, a higher value would indicate that one or more elements are faulty.

Disconnect them and check that the individual value of each element is as shown in the table according to the installed power and voltage.

Table 1. Elements Values List

(W)	(V)	x1 (Ω)	x2 (Ω)	x4 (Ω)	x6 (Ω)
450	230	117±2	58±2	29±2	19±2
900	230	58±2	29±2	14±2	9±2
900	400	177±2	88±2	44±2	29±2
1250	230	42±2	21±2	10±2	7±2
1250	400	128±2	64±2	32±2	21±2
1250	440	154±2	77±2	38±2	25±2
1500	230	35±2	17±2	8±2	5±2
1500	400	106±2	53±2	26±2	17±2
1500	440	129±2	64±2	32±2	21±2
1800	230	29±2	14±2	7±2	4±2
1800	400	88±2	44±2	22±2	14±2
1800	440	107±2	53±2	26±2	17±2
2000	230	26±2	13±2	6±2	4±2
2000	400	80±2	40±2	20±2	13±2
2000	440	96±2	48±2	24±2	16±2

Hose heating

WARNING! ***Before resolving any kind of defect, make sure all of the pushbuttons are off, that the general switch is in shutdown position and that the unit is disconnected from the power supply source. Never handle the inside of the control panel with the unit connected to the power supply. The hoses can reach high temperatures; wait until they have cooled before handling.***

Follow the recommended procedure in the order indicated, to try to solve the problem and avoid costly repairs. Make sure all the automatic switches and control elements are in the correct working position before determining the existence of a fault.

Metering pumps

WARNING! ***Before resolving any kind of defect, make sure all of the pushbuttons are off, that the general switch is in shutdown position and that the unit is disconnected from the power supply source. Never handle the inside of the control panel with the unit connected to the power supply. The metering pumps are components that work under pressure; do not open any connection or perform repair or maintenance work on components subject to pressure until all of the pressures have been completely eliminated.***

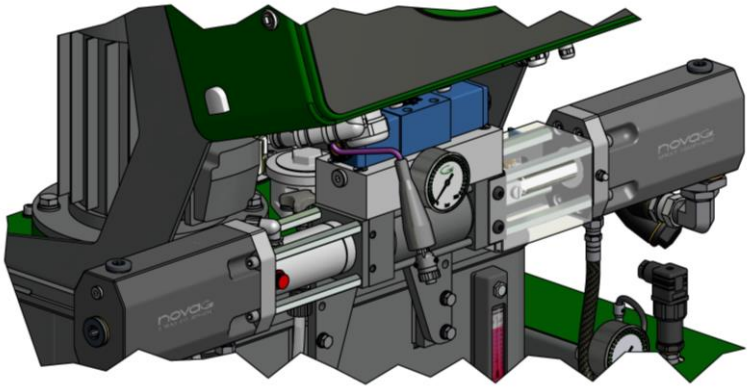

If excessive pressure is caused in the Isocyanate circuit or the Polyol circuit, an alarm will be activated that will be shown on the control panel (3 for the Isocyanate and 4 for the Polyol).

Follow the recommended procedure in the order indicated, to try to solve the problem and avoid costly repairs. Make sure all the automatic switches and control elements are in the correct working position before determining the existence of a fault.

PROBLEMS	**SOLUTIONS**
The pumps fail to maintain the pressure when the unit is shut down.	1
There are pressure differences between the metering pumps.	1-2-3
There is cavitation in the metering pump.	1-2-3
The metering pumps do not change direction.	4
The metering pumps fail to move and the direction indicator lights are out.	4-5
The movement of the metering pumps is erratic.	4

SOLUTIONS

1. Loss in the Valve Ball

Observe the pressure gages to identify which pump fails to maintain the pressure and check the direction indicator light to determine in which direction the pump fails to maintain the pressure. If the lit lamp is the left hand one and the pressure is lost in the Polyol pump, check the discharge valve ball of the Polyol pump; or check the inlet valve ball of the Isocyanate pump, if the pressure loss is caused in the Isocyanate pump.

If the lit lamp is the right hand one and the pressure is lost from the Polyol pump, check the inlet valve ball of the Polyol pump; or check the discharge valve ball of the Isocyanate pump, if the pressure is lost from the Isocyanate pump.

Proceed as follows to check the valve balls:

a) Disconnect the machine from the power supply and close both inlet ball valves and the supply system to the transfer pumps.
b) Depressurize the metering pump and remove the corresponding valve ball.
c) The loss from the valve ball is usually caused by foreign particles that prevent the perfect coupling of the ball with the ball seat. Clean the ball and the seat and make sure there are no faults from knocks, marks or scratches to the seat or the ball. If cleaning fails to resolve the problem or any fault is observed, replace the seat and the ball.

2. Decompensated Pressures

Pressures are decompensated when there is an obstruction in the hose or in the gun that prevents one of the components from leaving freely through the gun chamber when it is projected, or when a problem in the pumping system prevents one of the components reaching the gun in the required amount.

It is relatively easy to identify which component is problematic if we bear in mind that the chemical components used in the polyurethane foaming are of a different colour. By observing the color of the material that leaves the gun, we can determine which component is missing.

To determine whether the decompensation is caused as a result of an obstruction or as a consequence of a problem in the pumping system, project with the gun, observe the pressure indicated on the corresponding pressure gage to the missing component and compare it with the pressure indicated by the gage to the other component: if the pressure of the missing component is higher, the decompensation is the result of an obstruction, if the pressure is lower, the decompensation is the consequence of a problem in the pumping system.

3. Cavitation

Cavitation occurs when the metering pump requires a larger volume of material than that supplied by the feeding system, causing the formation of a vacuum in the inlet of the metering pump. The causes of cavitation are the following:

a) The transfer pump fails to supply the necessary volume. The problem might be in the pump not meeting the required specifications, in the lack of air supply to the pump or that the pump is faulty. A pump is recommended with a ratio of 2:1 for transferring the Isocyanate and a supply hose with an interior diameter of at least 20 mm (¾ in).
b) High viscosity. The polyurethane foaming systems normally require a minimum transfer temperature of 12º C (55 F); at lower temperatures, the product increases its viscosity, making the pumping more difficult. When the ambient conditions prevent the products from being maintained at a minimum temperature of 12º C (55 F) auxiliary heating elements must be used to condition the products as the minimum temperature required for the transfer.
c) The product inlet filter is obstructed (see Maintenance).
d) The inlet valve ball has leaks as a result of wear or possible faults in the ball or the closing surface of the seat, which means that part of the material supplied returns to the supply tank and that the metering pump supplies a smaller volume of material in the discharge cycle, causing an incorrect ratio.

4. Fault in the Reversing Switch

The metering pump system has a plate that activates the reversing switches to carry out the change of direction. The most common cause of the fault is the deformation of the plate or the entry of a foreign body preventing the plate from making contact with the micros.

A fault in the movement of the directional valve will cause the activation plate to pass the micro

Faced with any anomaly follow the instructions indicated on the screen to solve any problem.

5. Over Pressure Safety Switch

Each metering pump is protected by a safety pressure switch factory set to limit the pressure depending on the size of the pumps installed in the unit. For **1.2** and **0.8** size pumps, the limit pressure set in the factory is 270 bar (3900 psi). When the limit pressure is reached, the pressure switch interrupts the electrical supply to the directional valve, stopping the pumps. When the pumps stop, the direction indicator lights will go out and an alarm will be activated that will be shown on the control panel (3 if the excess pressure is caused in the Isocyanate circuit or 4 if it is caused in the Polyol circuit).

Faced with any anomaly follow the instructions indicated on the screen to solve any problem.

When the pressure reaches lower values than the established limit, the metering pumps will restart. However, the causes of the excess pressure must be determined and corrected.

Hydraulic Unit

WARNING! ***Before resolving any kind of defect, make sure all of the pushbuttons are off, that the general switch is in shutdown position and that the unit is disconnected from the power supply. Never handle the inside of the control panel with the unit connected to the power supply. The hydraulic unit is a component that works under pressure; do not open any connection or carry out maintenance work on components subject to pressure until all of the pressures have been completely eliminated.***

Follow the recommended procedure in the order indicated, to try to solve the problem and avoid costly repairs. Make sure all the automatic switches and control elements are in the correct working position before determining the existence of a fault.

PROBLEMS	SOLUTIONS
The electric motor does not start or stops while it is working.	1
The hydraulic pump fails to develop pressure.	2
Little or no pressure with screeching.	2-3

SOLUTIONS

1. Automatic Switch

The electric motor is protected by an overload safety switch that triggers when the motor draws excessive current. Disconnect the machine from the power supply, allow the motor to cool, open the control panel and reset the automatic switch for the motor.

Faced with any anomaly follow the instructions indicated on the screen to solve any problem.

It is important to determine the reason why the motor has been subject to an overload. Reset one time only or the electric motor may be damaged due to overheating.

2. Little or No Pressure

The most likely causes of low or no pressure is usually a deficient supply of the hydraulic fluid to the pump. This can be caused by incorrect priming, a lack of hydraulic fluid or dirt in the return filter. Check the indicated points to guarantee correct operation.

3. Noise

A noise similar to screeching is a symptom of cavitation. The noise is normal if it occurs when starting and lasts for approximately thirty seconds.

If the noise continues, stop the machine to protect the hydraulic pump and make sure that the connectors are tight and that the pump has been correctly primed.

Another possible cause of noises in the pump is excessive temperature in the hydraulic oil. Make sure the oil supply is correct, and, if necessary, improve the ventilation to allow better dissipation of the heat in the hydraulic tank.

MAINTENANCE

To achieve maximum output from the **novaG - III** unit, certain daily or regular maintenance operations are needed.

To prevent possible bodily harm caused by incorrect handling of the raw materials and solvents used in the process, carefully read the safety information provided by your supplier.

Deal with the waste created according to current regulations.

Disconnect the unit from the power supply before carrying out any operation inside the electrical console.

The electrical maintenance of the machine must only be performed by a qualified electrician.

To avoid damage caused by the impact of pressurized fluids, do not open any connection or perform maintenance work on components subject to pressure until the pressures have been completely eliminated.

Use suitable protection when operating, maintaining or remaining in the operating area of the unit. This includes, but is not limited to, the use of face masks, protective goggles, gloves, shoes and safety clothing.

The unit includes components that reach temperature that are liable to cause burns. The hot parts of the unit must not be handled until they have cooled.

To prevent serious harm by crushing or loss of limbs, do not work with the unit without the safety duly installed on all moving parts. Make sure that all of the safety protections are correctly fitted after all repair or maintenance work.

Heaters

WARNING! ***Before performing any maintenance work, make sure all of the pushbuttons are off, that the general switch is in shutdown position and that the unit is disconnected from the power supply source. Never handle the inside of the control panel with the unit connected to the power supply. The heater is a component that reaches high temperatures; wait until it has cooled before handling.***

1. Heating Elements

To replace a faulty element, proceed as follows:

a) Depressurize the unit, disconnect it from the power supply and remove the cover on the heater.
b) Disconnect the element from the terminal block and with an appropriate spanner, loosen the element and remove it from its housing. Inspect the element; it must be smooth and shiny in appearance. If it is blackened or has material adhered, replace it.
c) Check the new element with a tester: the reading of the value of the resistance must be as shown in Table 1 on pag.53.
d) Apply Teflon or sealing paste to the thread and assemble the element into its housing.
e) Reconnect the wires to the terminal block; make sure the connection is in parallel and fit the heater cover.

NB: ***If the element that has to be replaced is the one in contact with the temperature probe, first remove the probe.***

2. Temperature

The temperature probe is fixed to the connector with a ferule and a torque nut. Once inserted in its housing, the ferule forms to the probe and does not allow it to be relocated or moved. The location of the probe is very important and must be done correctly before fitting the torque nut.

a) Depressurize the unit and disconnect it from the power supply. Check the torque of the body of the connector inserted in the heater to prevent leaks.
b) Assemble the heating element.
c) Insert the torque nut and the ferule in the probe and insert this in the connector body until it comes into positive physical contact with the heating element. Make sure the spring does not prevent the probe from making contact with the resistance.
d) Fix the probe in place and tighten the torque nut.

Hydraulic unit

WARNING! ***Before performing any maintenance work, make sure all of the pushbuttons are off, that the general switch is in shutdown position and that the unit is disconnected from the power supply. Never handle the inside of the control panel with the unit connected to the power supply. The hydraulic unit is a component that works under pressure; do not open any connection or carry out maintenance work on components subject to pressure until all of the pressures have been completely eliminated.***

The hydraulic unit must be serviced each year as indicated below:

a) Depressurize the unit and disconnect it from the power supply. Clean the hydraulic tank lid to prevent foreign bodies from falling into the tank when the lid is removed.
b) Separate the lid and the motor-pump assembly from the hydraulic tank. Inspect the bottom of the tank for sediments. If there is sediment present, the tank must be emptied completely and the bottom must be cleaned, eliminating all the sediment and filling it once more with new hydraulic fluid.
c) Clean the suction pipe and its connections.
d) Replace the oil filter of the return line
e) Check that the hydraulic pump is full of fluid and check all hydraulic connections.
f) Mount the lid and the motor-pump assembly.
g) Proceed with the normal operation.

Metering pumps

WARNING! ***Before resolving any kind of defect, make sure all of the pushbuttons are off, that the general switch is in shutdown position and that the unit is disconnected from the power supply source. Never handle the inside of the control panel with the unit connected to the power supply. The metering pumps are components that work under pressure; do not open any connection or perform repair or maintenance work on components subject to pressure until all pressures have been completely released.***

When pumps are functioning properly, it is not unusual for a small amount of resin to seep through the pump packing onto the resin pump shaft. Periodically inspect shaft and wipe away any residue when the proportiones is turned off.

Disassemble and clean the proportioning pumps annually, even if there are no apparent signs of leakage. Make sure to replace all packings, o-rings and bushings during this maintenance, even if there is no apparent damage. Not doing this can result in a premature failure of the new components (please refer to tables 16 and 20 in the Service Manual NR-00003 for p/n of the different models and sizes). Also inspect the lower and upper ball and the seat assembly, looking for wear, hits or marks that may affect the normal functioning of the pump.

Check the condition of the ISO pump lubricant daily. Change the DOTP if it becomes gelatinous or darker. Gel formation is due to moisture absorption by the pump lubricant. The interval between changes depends on the environment in which the equipment is operating. The pump lubrication system minimizes exposure to moisture, but some contamination is still possible. Lubricant discoloration is due to continual seepage of small amounts of isocyanate past the pump packings during operation. If the packings are operating properly, lubricant replacement due to discoloration should not be necessary more often than every 3 or 4 weeks.

For those situations where the unit is operating under severe working loads or in special working conditions, disassemble and clean the proportioning pumps every 6 months.

Inspect shafts, pistons and cylinder inner surface looking for scratches that could cause premature leakage or damage to the seals.

Maintenance work may only be carried out by authorized professional, with the right knowledge and special tools. These tools are available under request.

NOTICE: ***There are two special assembly tools for every size of proportioning pumps, one (A) to insert the shaft assembly into the sleeve and the second (B) for the assembly of the static seal through the shaft.***

	Tool A	Tool B
For Pump #1.20	HT-00095	HT-00035
For Pump #0.80	HT-00094	HT-00036

Corresponding instructions are supplied with the specific tools.

Inlet supply filters

The filter bodies have a filter screen that prevents solid particles from entering the unit. Inspect the filters each day as part of the machine start-up, and clean them. Replace the filter screen if necessary.

Isocyanate is a product that crystallizes with ambient moisture or freezing. If the storage and transfer is correct and the operating procedures are respected, the risk of contamination of the Isocyanate filter will be minimized.

***NB:* Clean the Isocyanate inlet filter before the daily start-up; it should not be cleaned after the machine has been stopped for the day. Immediate use after cleaning the filter reduces the risk of moisture contamination or contamination through the reaction with the solvent used in the cleaning operation.**

To check the product inlet filters, proceed as follows:

a) Disconnect the unit from the power supply and close the inlet ball valve from the filter you wish to check.
b) Place a suitable vessel under the filter to collect the product coming out on removal. Carefully loosen the filter stopper to allow the product to be emptied into the vessel below. Completely unscrew the stopper.
c) Remove the seal, the spring and the mesh and clean it all with the solvent used for cleaning the gun. Dry it all and check that the mesh is not obstructed. The holes in the mesh must be completely free. Replace the mesh if more than 10% of the surface is obstructed.
d) Refit the mesh, the spring and the seal. Screw on the stopper.
e) Open the product entry valve of the filter, make sure there are no leaks and proceed with the normal operation.

Isocyanate pump lubrication system

Each day, inspect the lube reservoir of the Isocyanate pump and check the condition of the DOTP. Replace the oil when it shows changes in colour or signs of solidification.

Oil solidification is the result of the absorption of moisture and the maintenance interval will depend on the working conditions. The closed circuit system reduces contamination.

Oil discoloration is due to the small film of Isocyanate that lies on the pump shaft during the pumping operation. If the gaskets and the seals are in a good condition, the plasticizer will not have to be changed so frequently.

To replace the plasticizer, proceed as follows:

a) Project the gun until the Isocyanate metering pump is placed on the right hand side. Press the NORMAL key to interrupt the working cycle. The pushbutton led will go out.
b) Press the MOTOR and POWER CONTROL keys and turn the general switch OFF. Disconnect the machine from the power supply.
c) Remove the tank from the support, unscrew the lid, remove the non-return valve of the suction hose, empty the contaminated plasticizer in a suitable vessel and refit the non-return valve in the suction hose.
d) Clean the tank, fill it with DOTP, screw on the lid and refit the tank in the support. The system is auto-suction and does not need priming.

CONTENT

Warranty 2

Safety and Handling 3

Characteristics 5

- Principal Heating System 5
- Hose Heating System 5
- Double Acting Opposed Piston Metering Pumps 5

Technical Specifications 6

- Electrical 6
- Mechanical 6

General Description 7

Tactil screen 10

- Example Description Elements Screens 10
- Main screens map 11
- Sub screens control mode map (Optional) 12
- Sub screens Parameters Map 13
- System Sub screens map 14
- Logger sub screen map 15
- Alarm sub screens map 16
- Screens information 17

Warnings 29

Alarms 34

Novag Plus Wi-Fi Communication Kit 41

- Description 41
- Installation & Setup 41
- Wi-Fi Connection Setup for iOS systems 42
- Wi-Fi Connection Setup for Android systems 43
- Method of Operation with Mobile Devices 44

Installation 45

Start - UP Procedures 52

Shutdown procedures 54

Cleaning 55

long term shutdown procedures 56

Troubleshooting 57

- Heaters 58
- Hose heating 60
- Metering pumps 61
- Hydraulic Unit 64

Maintenance ____ 65
Heaters ____ 66
Hydraulic unit ____ 67
Metering pumps ____ 68
Inlet supply filters ____ 69
Isocyanate pump lubrication system ____ 70
Content ____ 71
List Of Illustrations ____ 73

LIST OF ILLUSTRATIONS

Figure 1. General Description. _____ 7
Figure 2. Method of Union for Hoses _____ 47